Orange Mini Conveyor

Model instructions by Maico Arts

303 Pieces

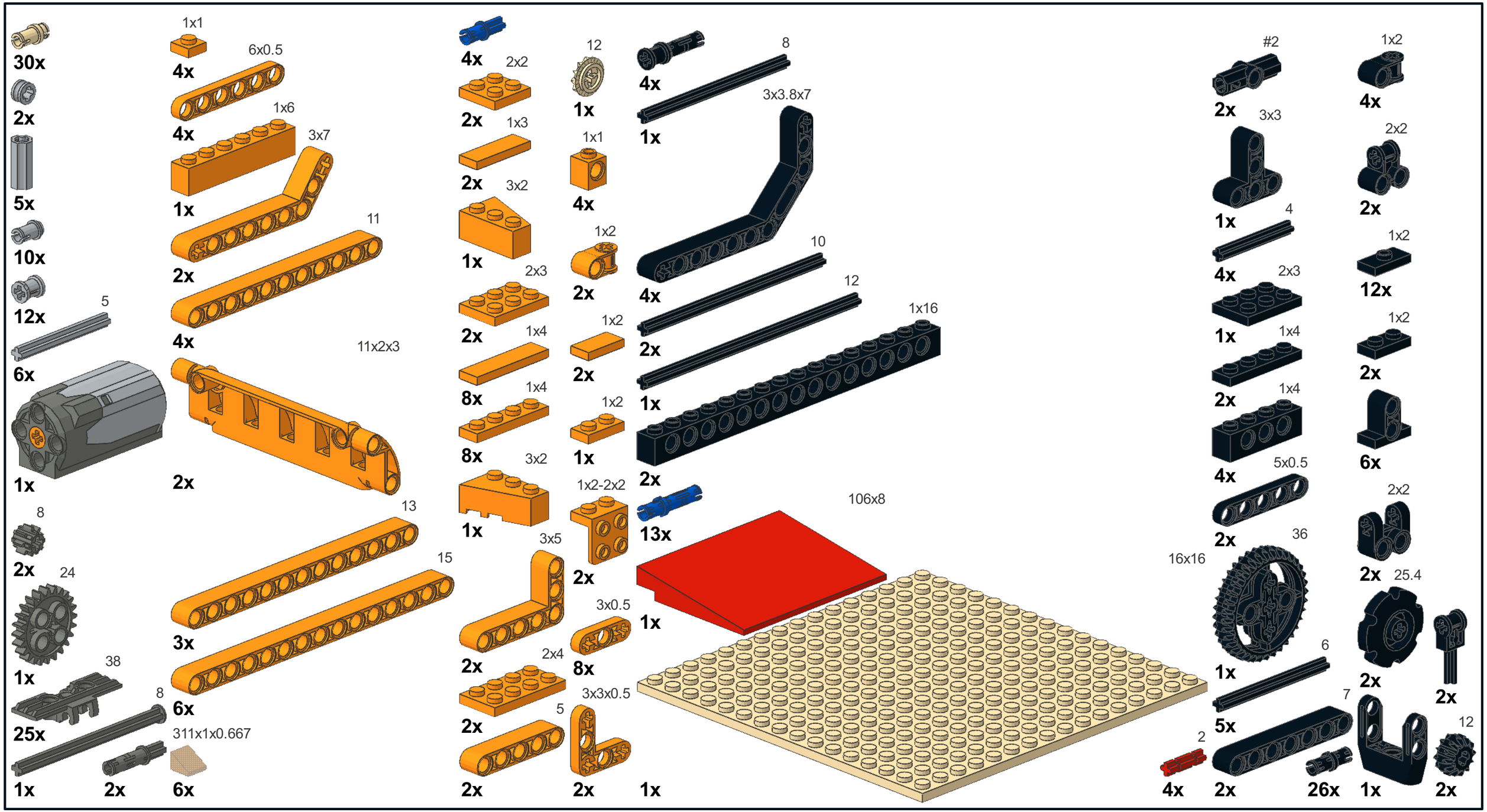

Copyright © 2016 by Maico Arts

1

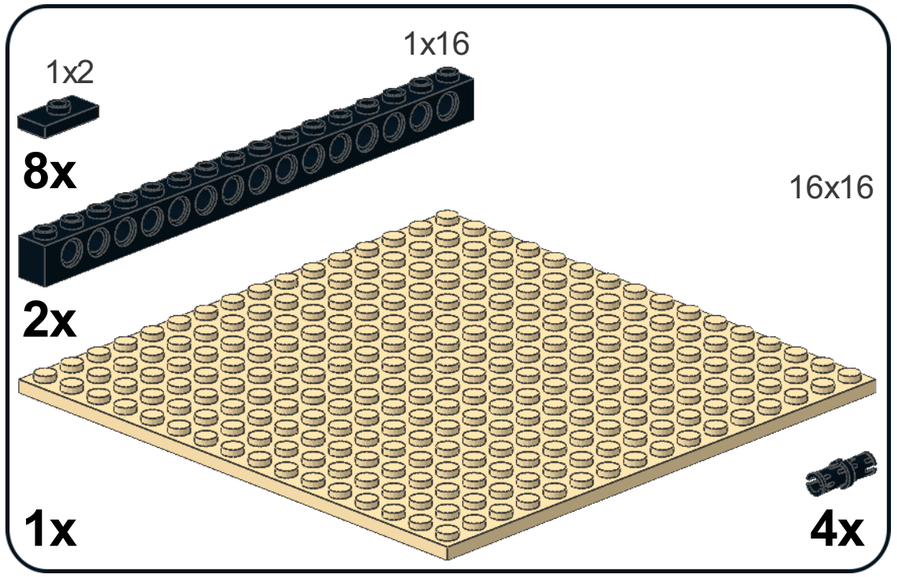

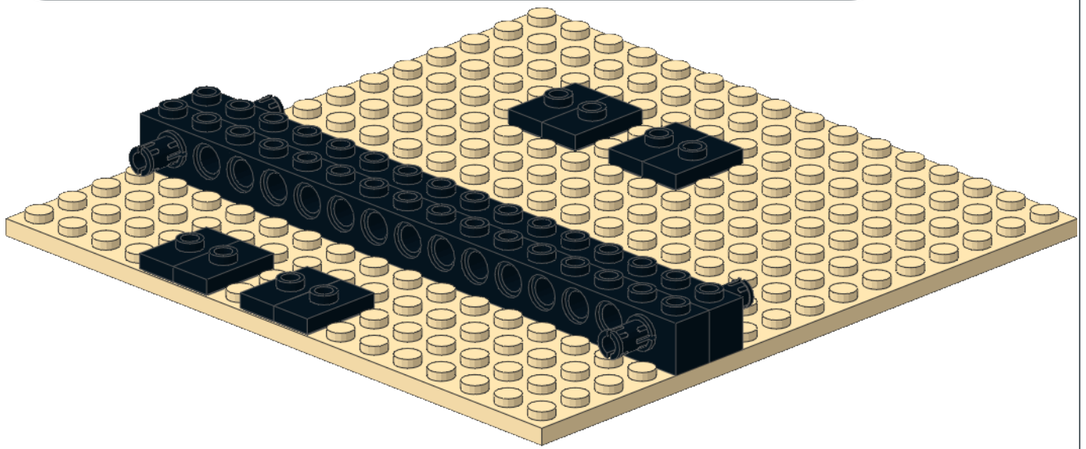

2

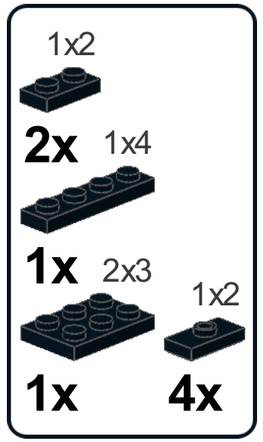

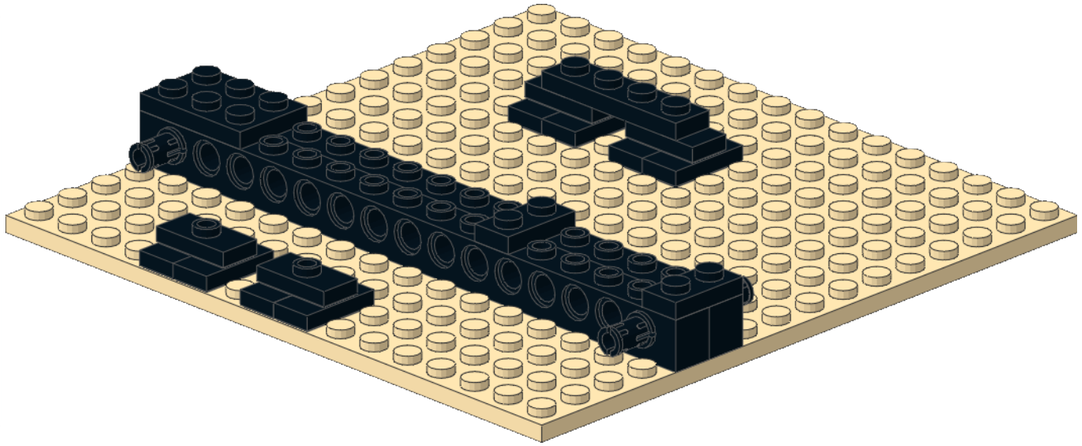

3

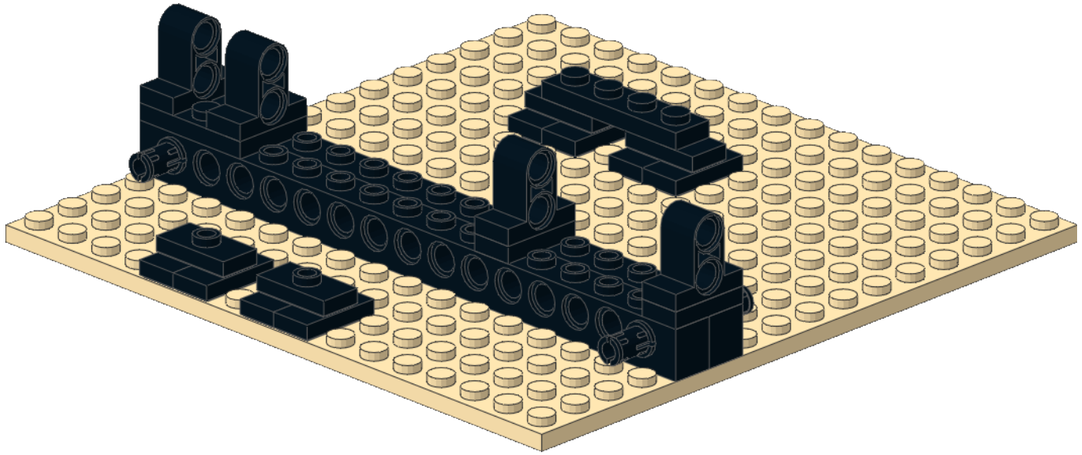

4

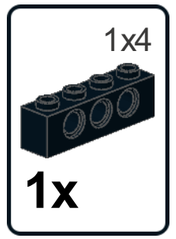

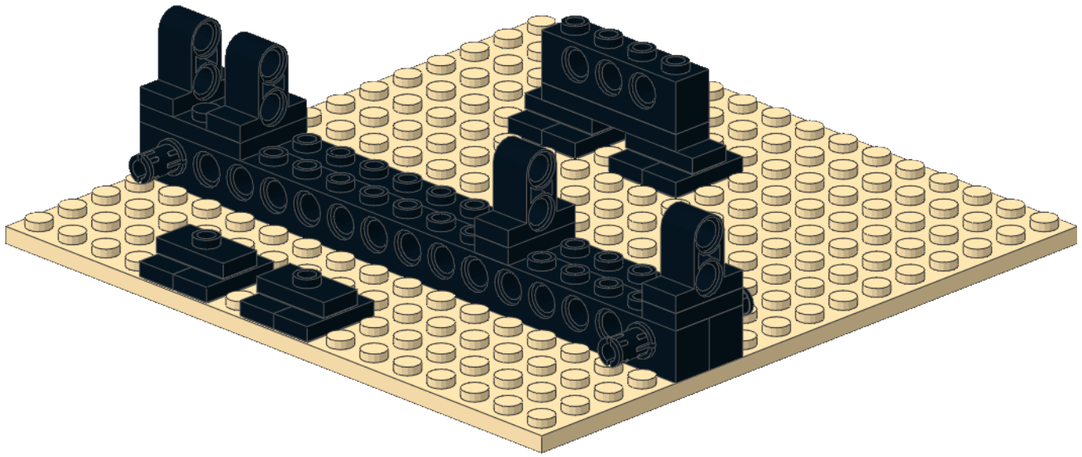

Copyright © 2016 by Maico Arts

5

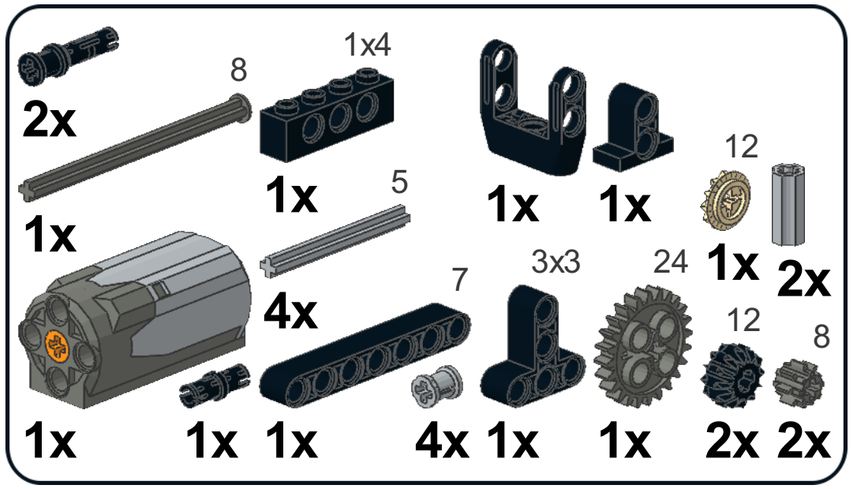

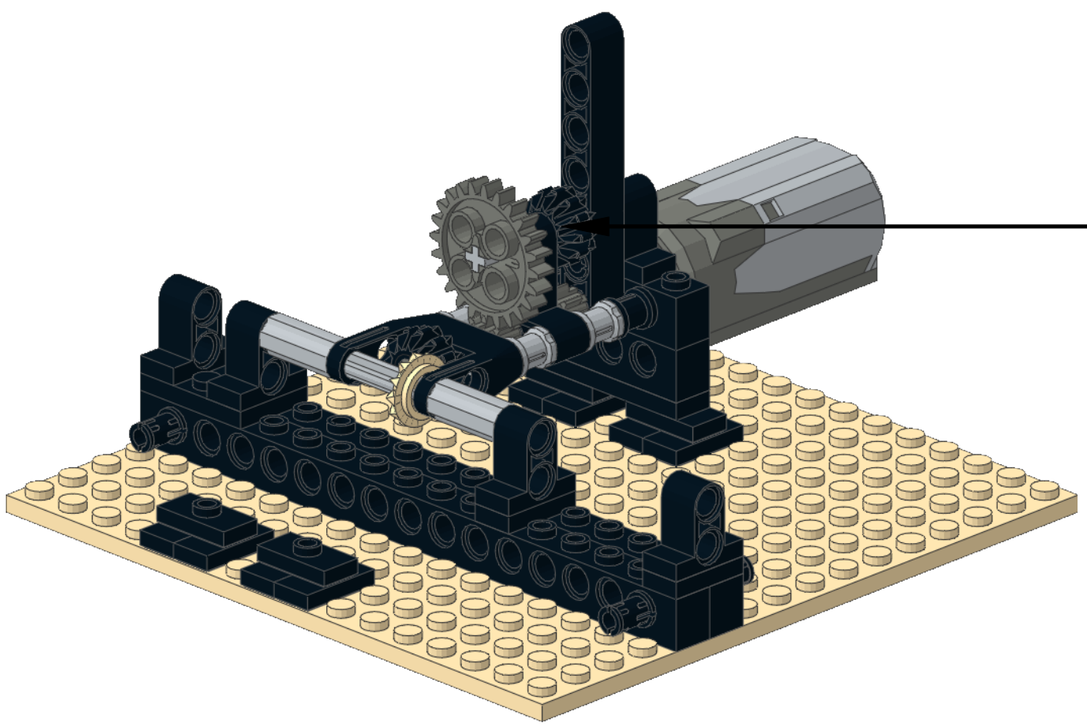

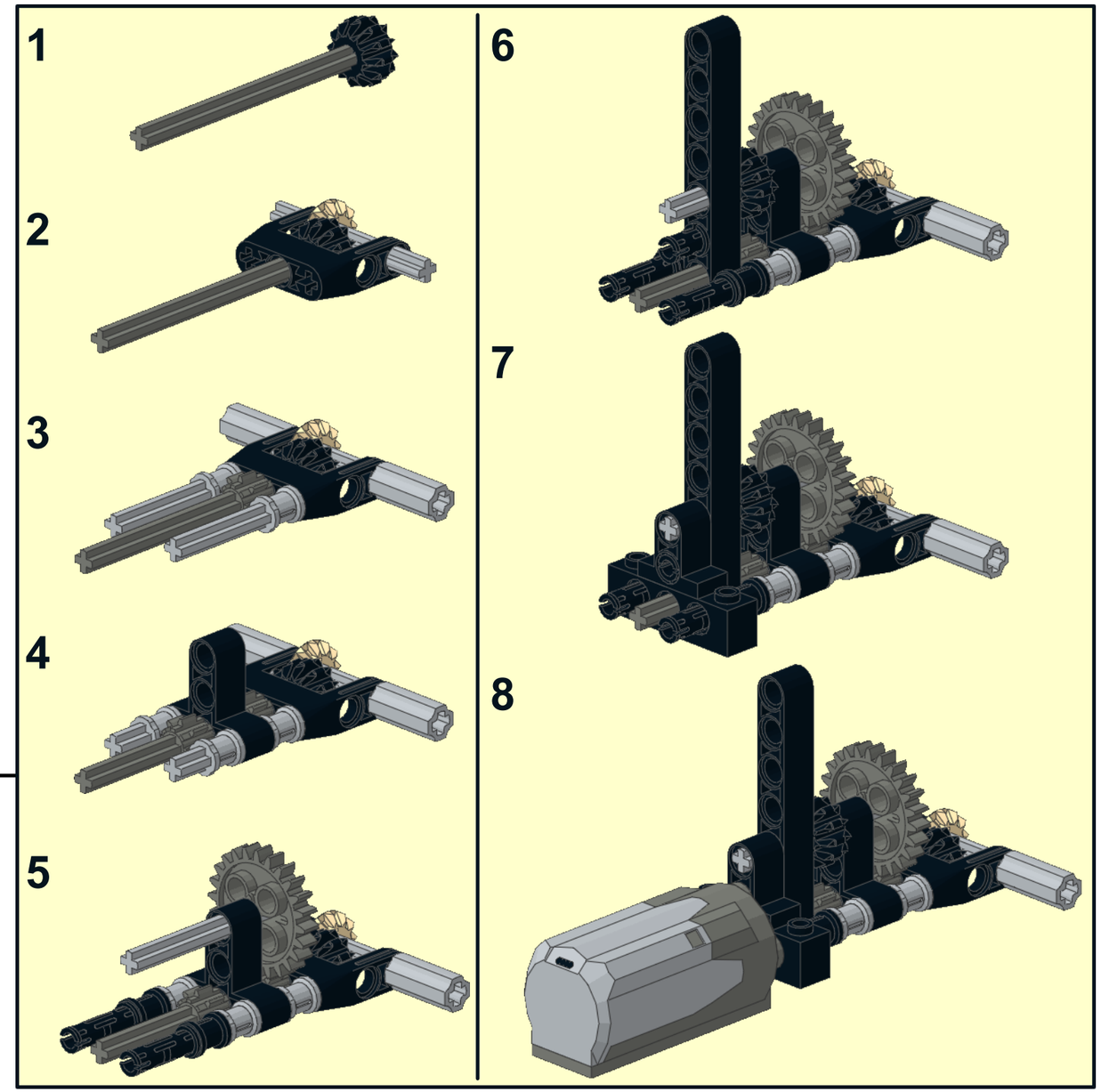

Copyright © 2016 by Maico Arts

6

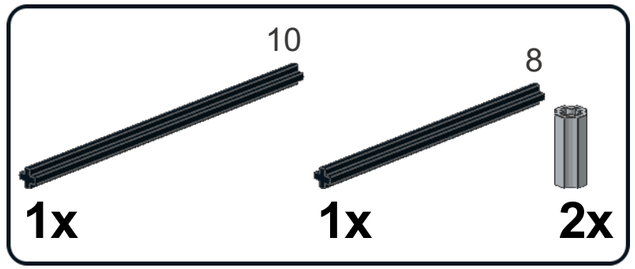

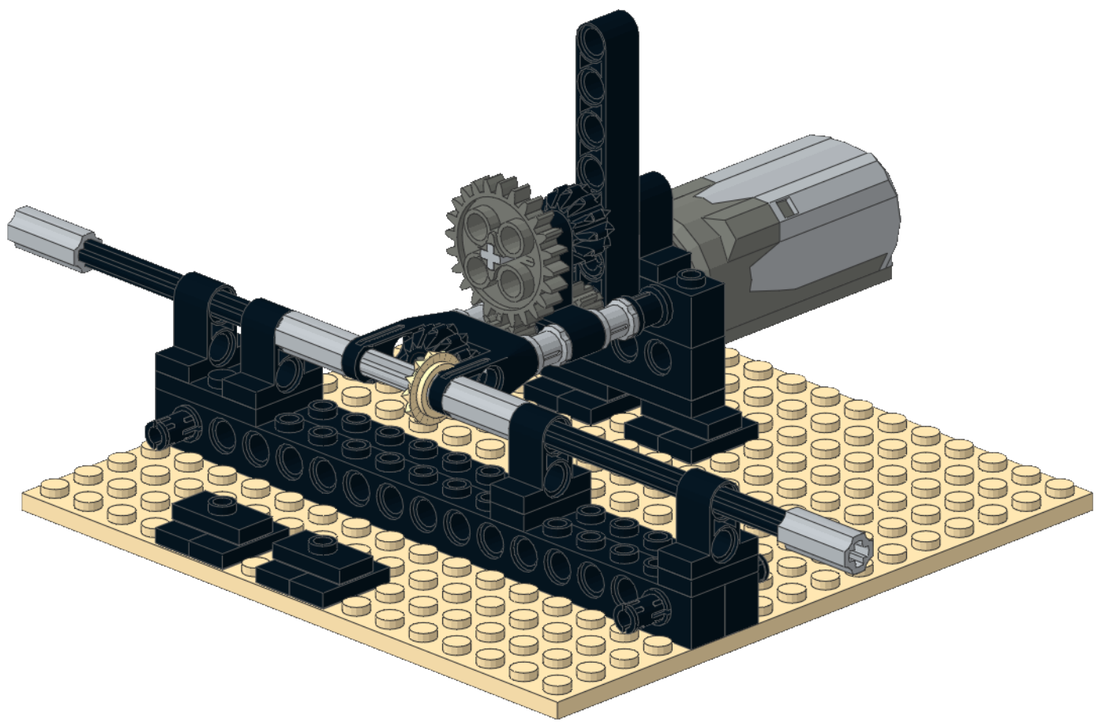

7

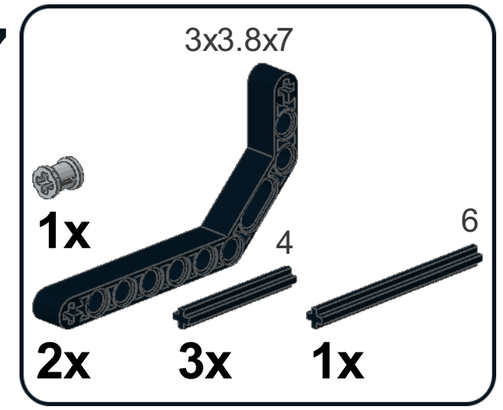

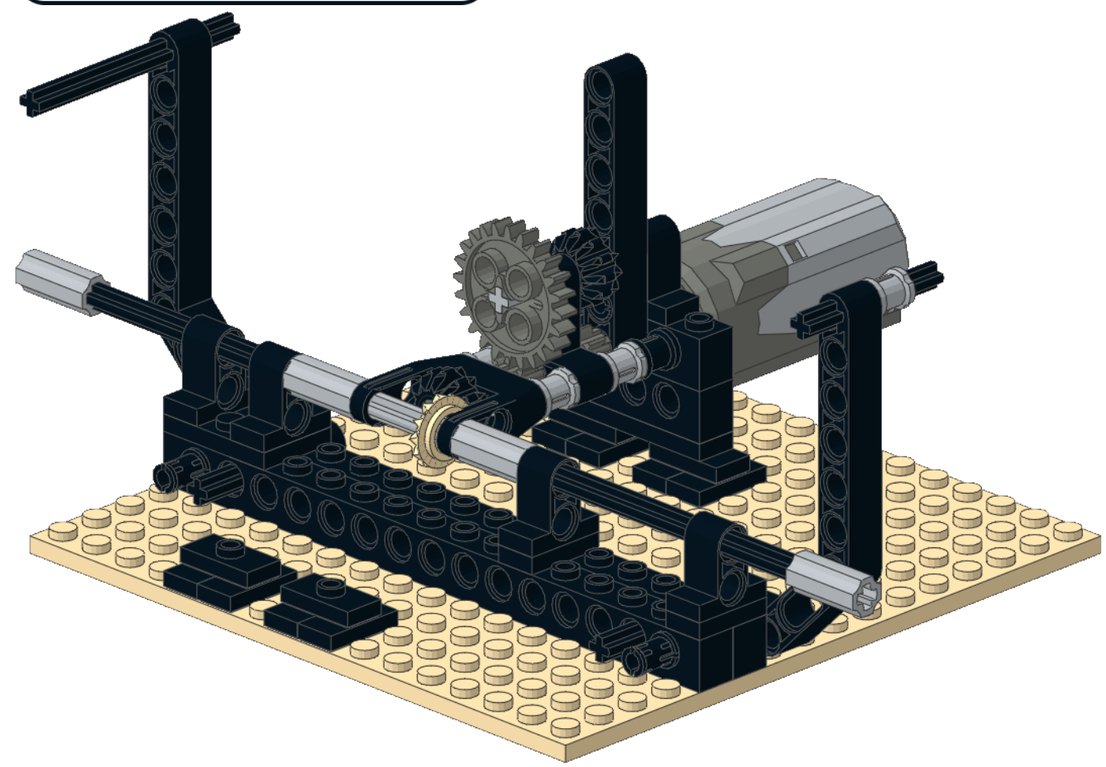

Copyright © 2016 by Maico Arts

8

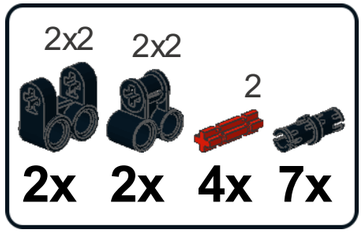

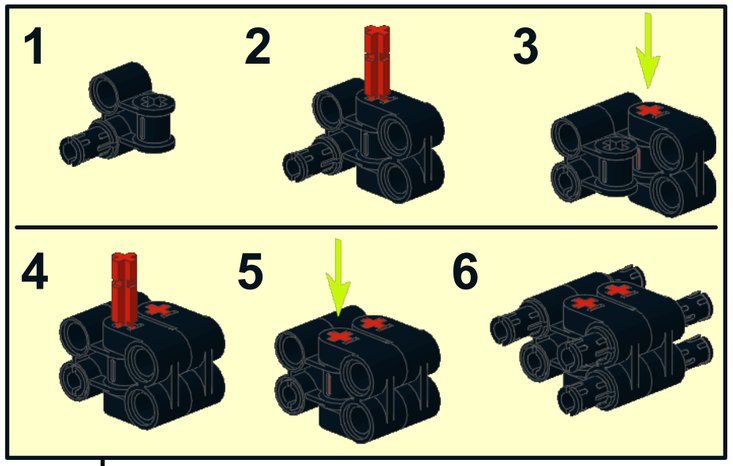

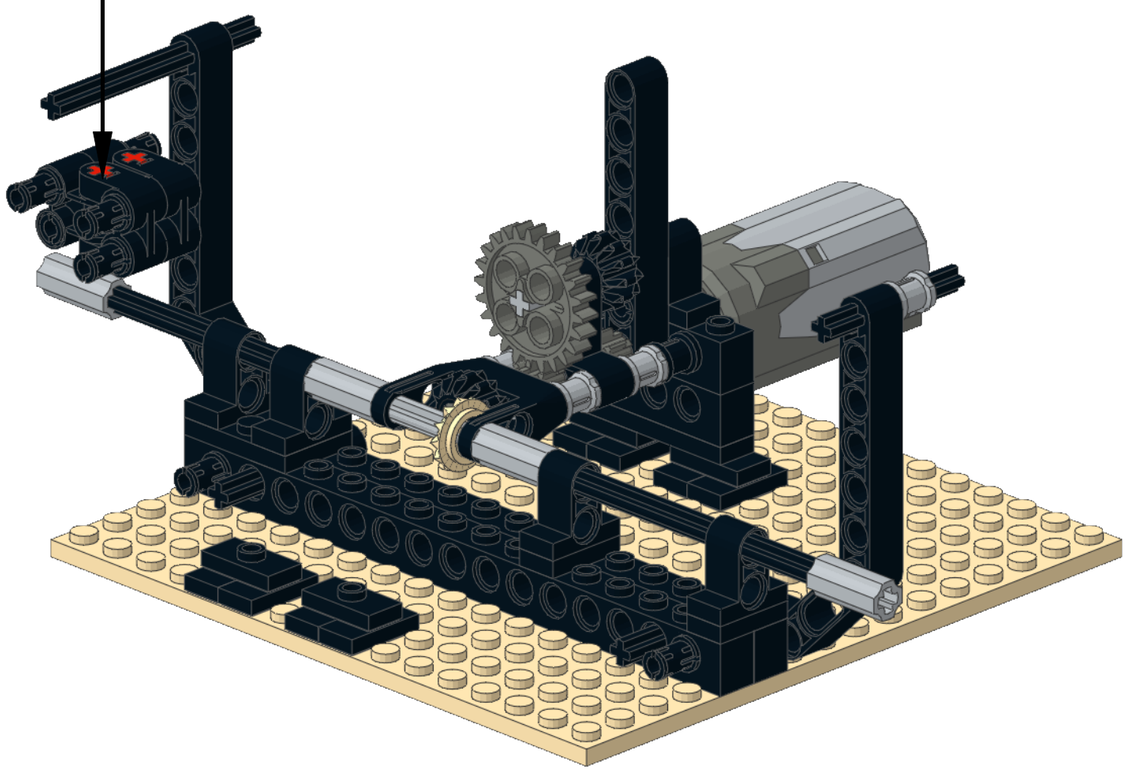

9

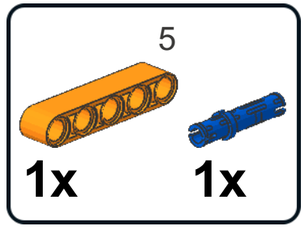

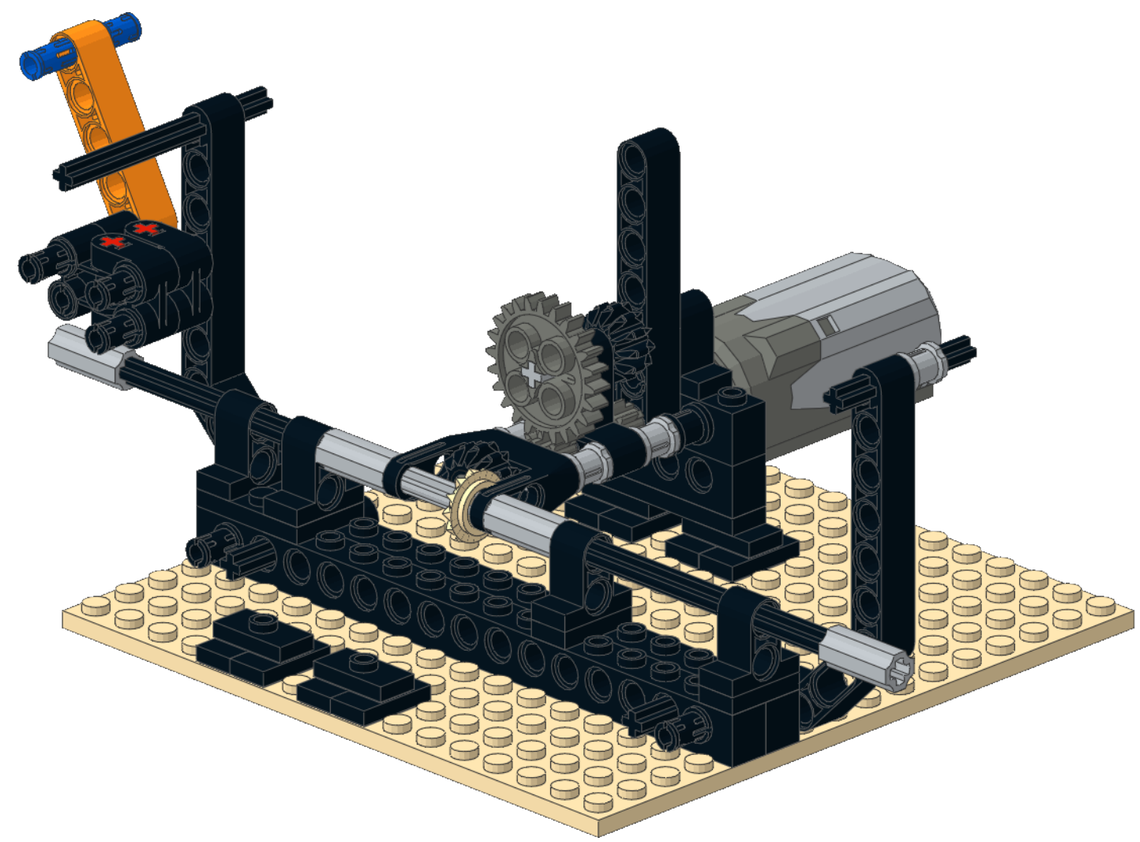

Copyright © 2016 by Maico Arts

10

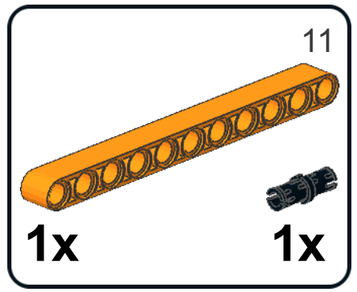

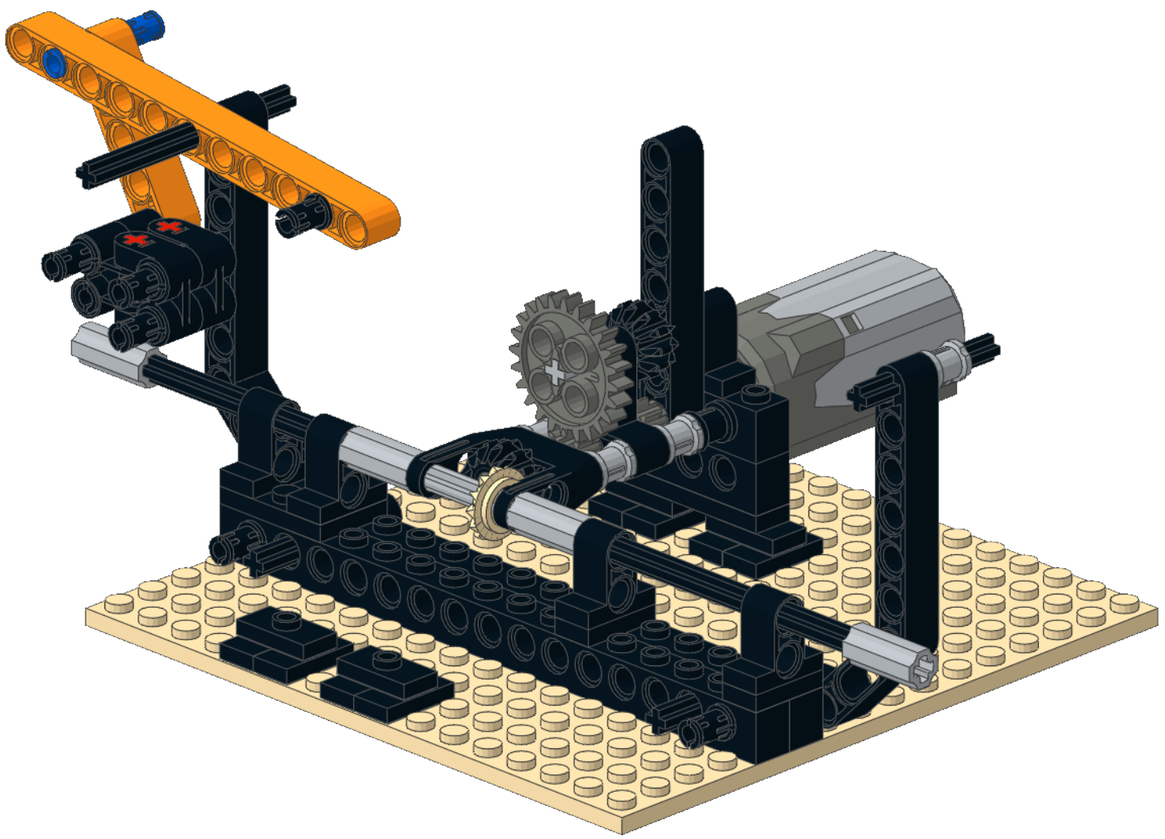

11

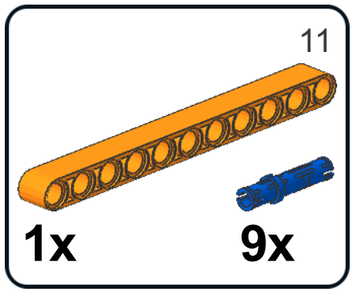

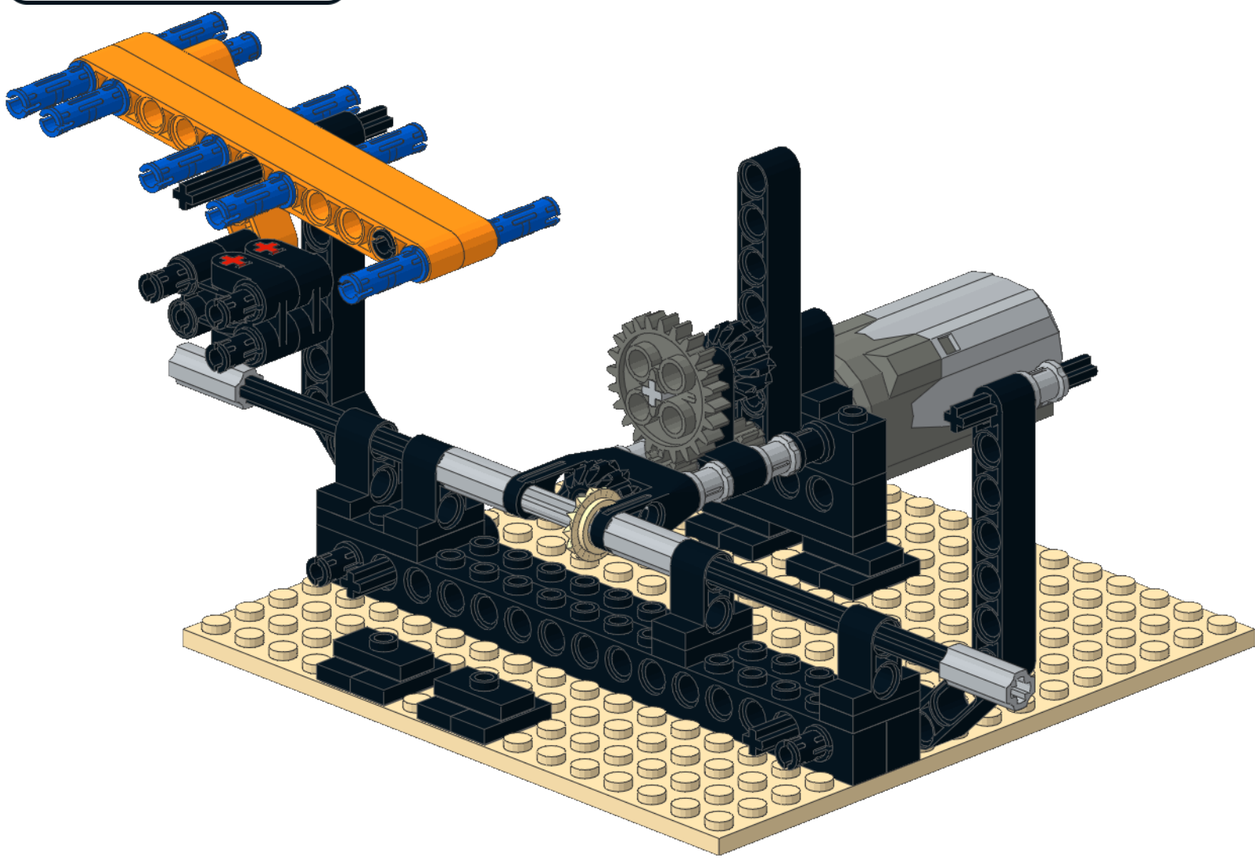

Copyright © 2016 by Maico Arts

12

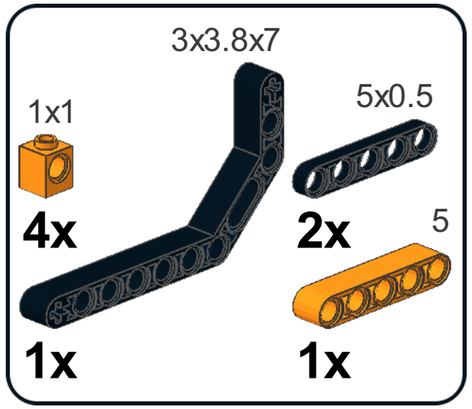

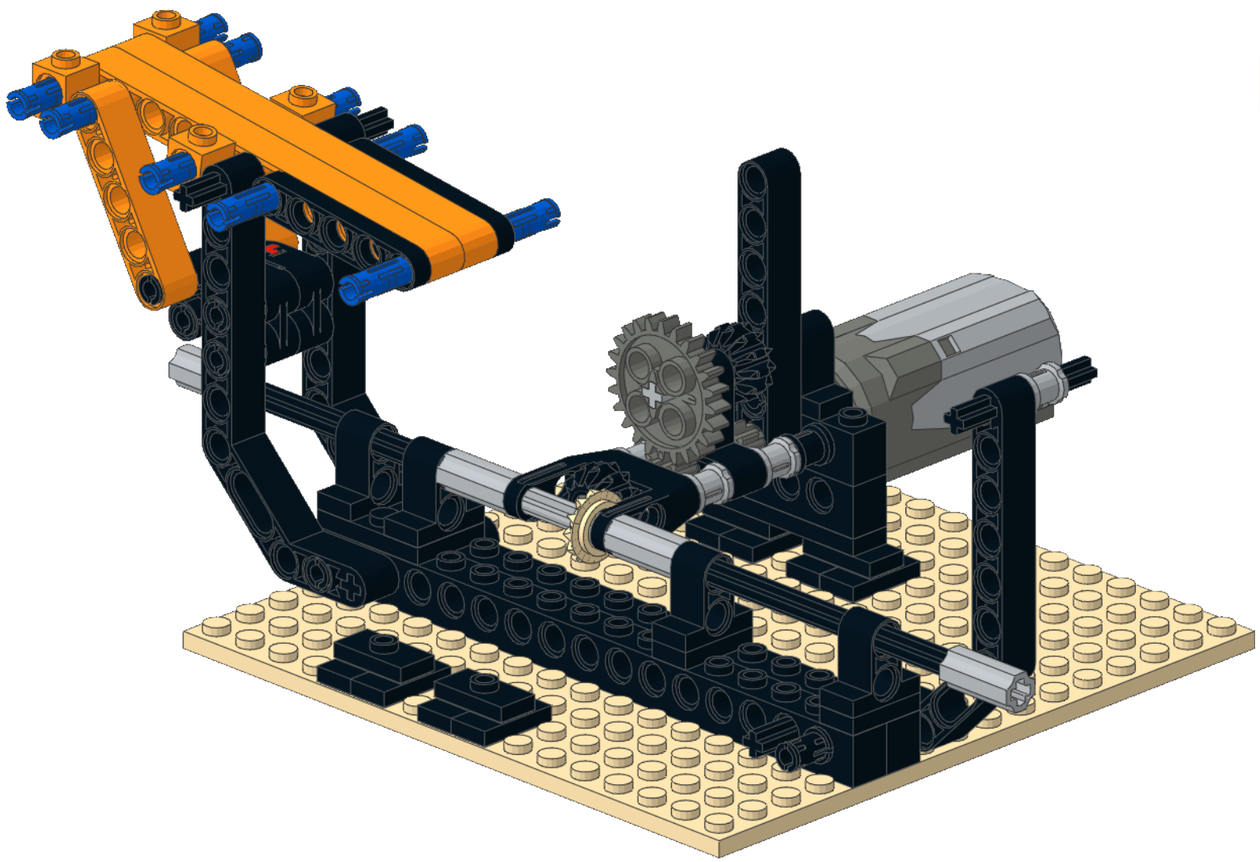

13

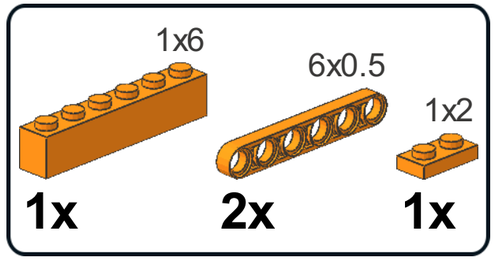

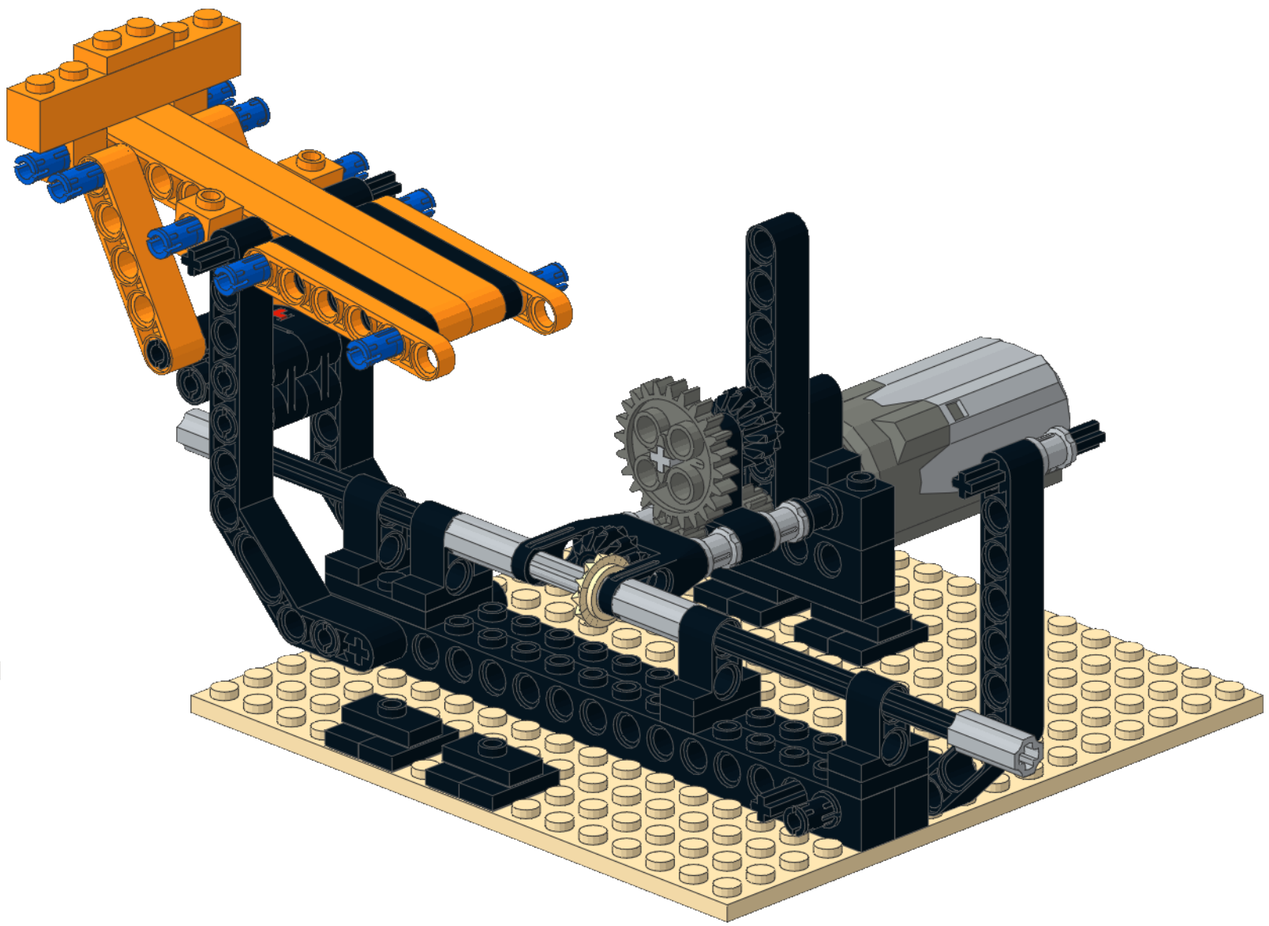

14

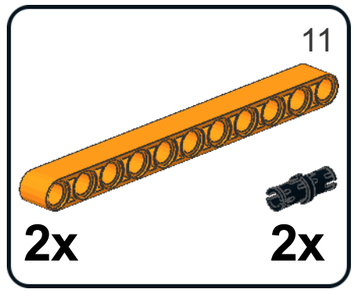

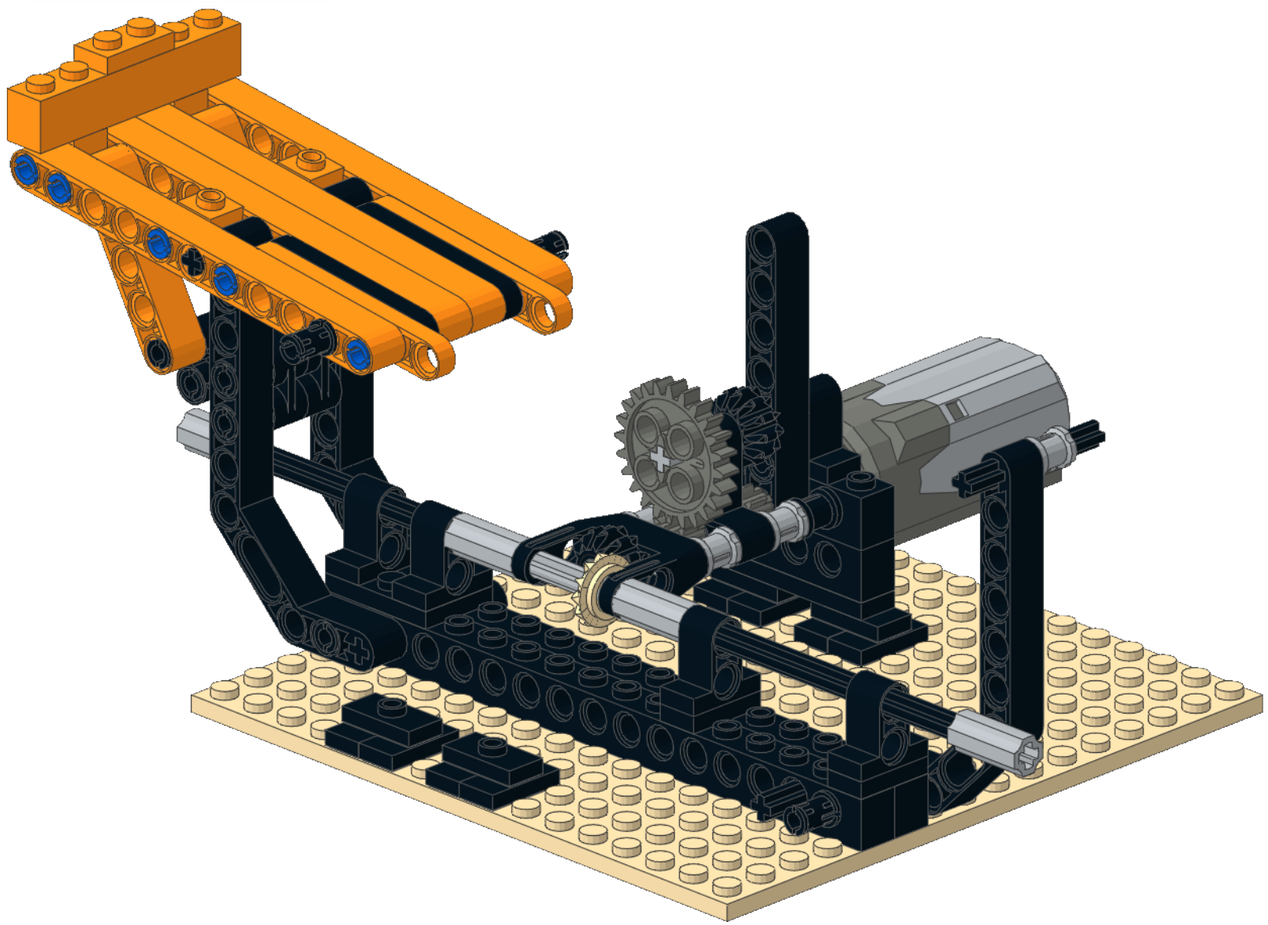

15

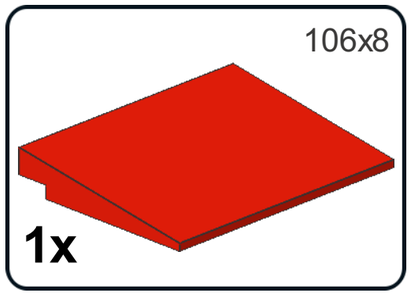

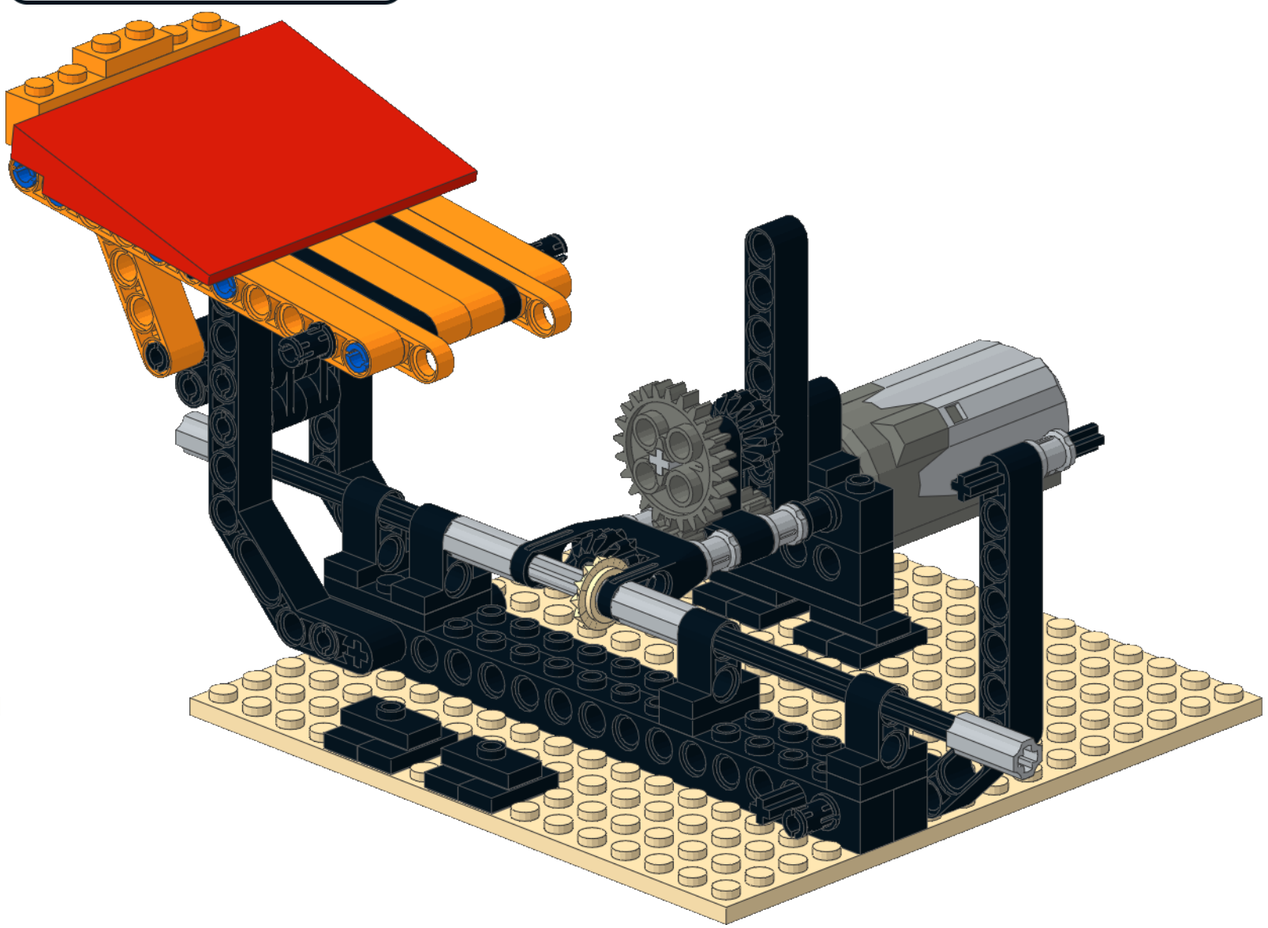

Copyright © 2016 by Maico Arts

lego@t-hok.nl

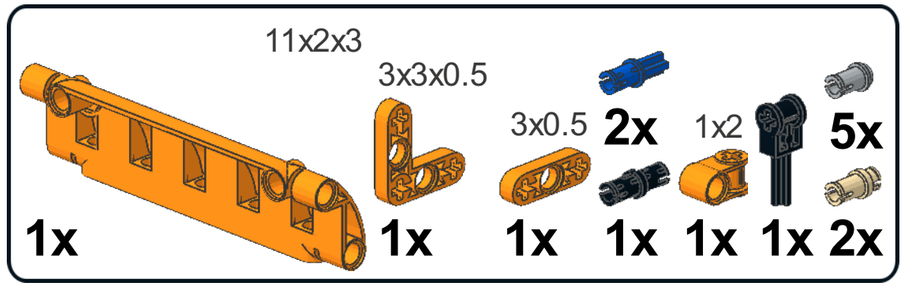

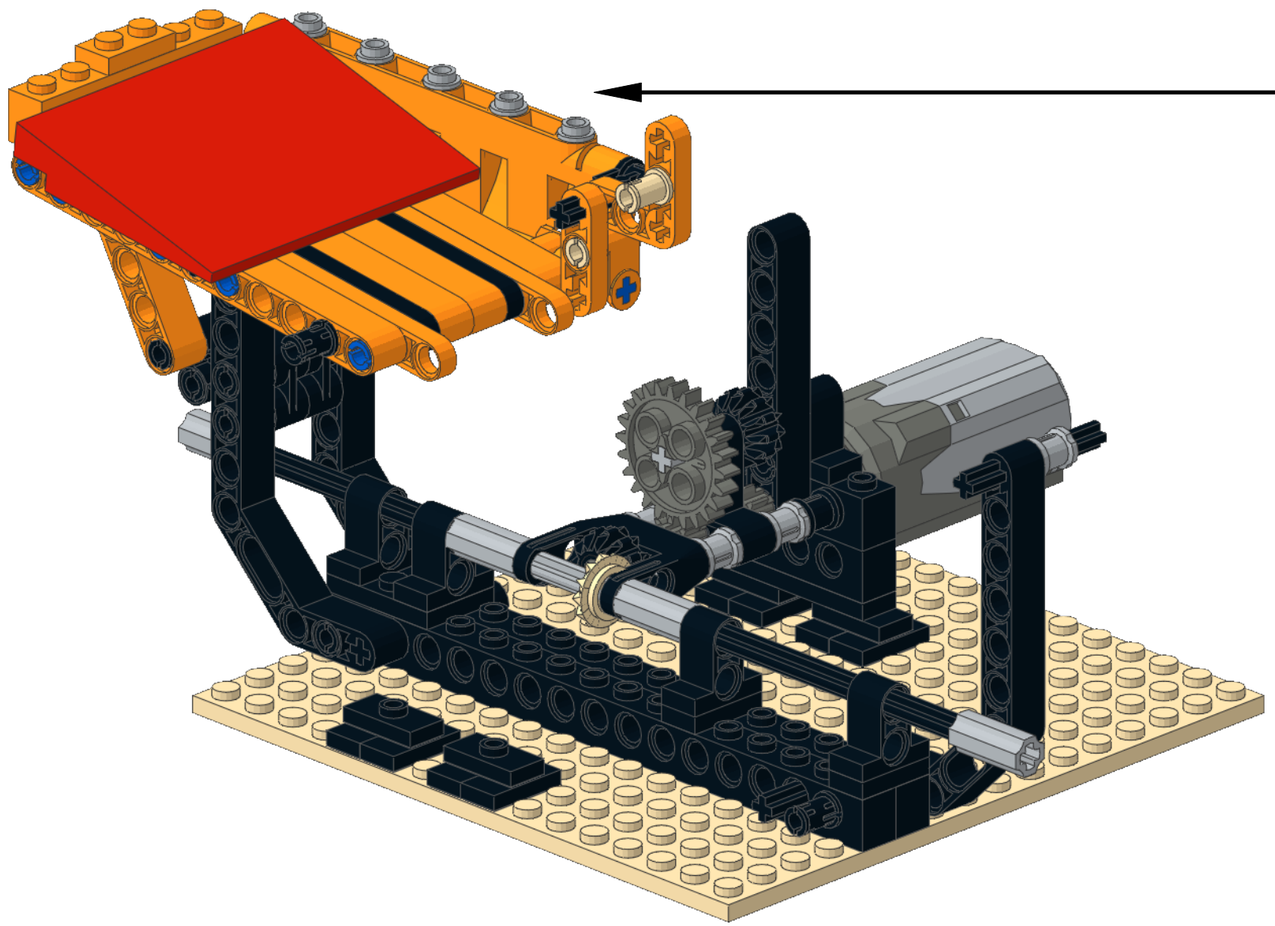

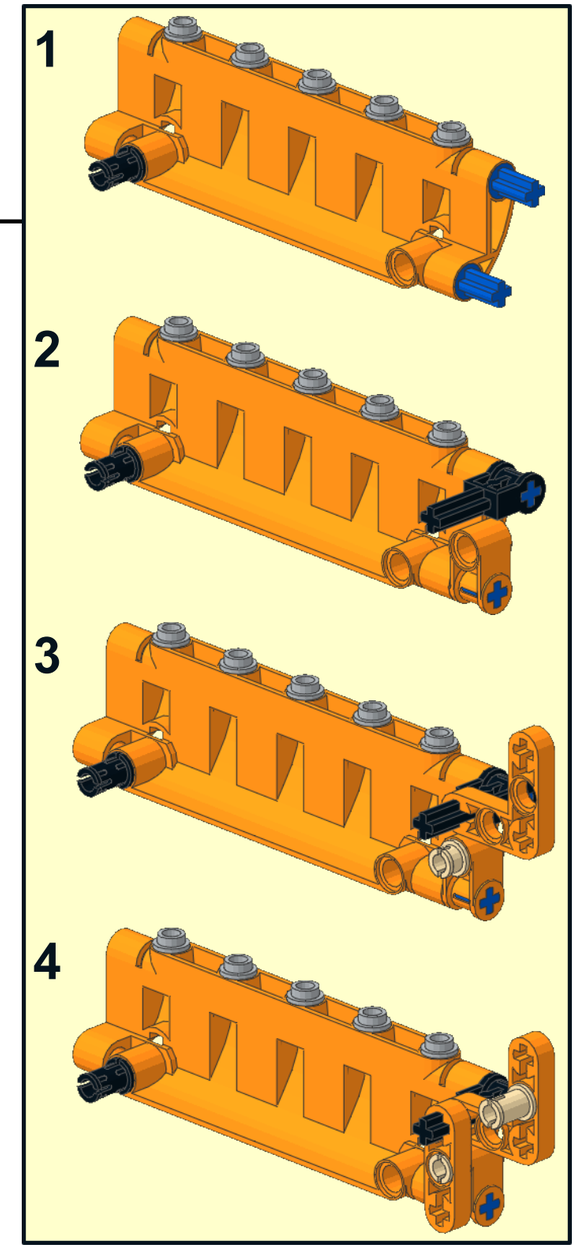

Copyright © 2016 by Maico Arts

lego@t-hok.nl

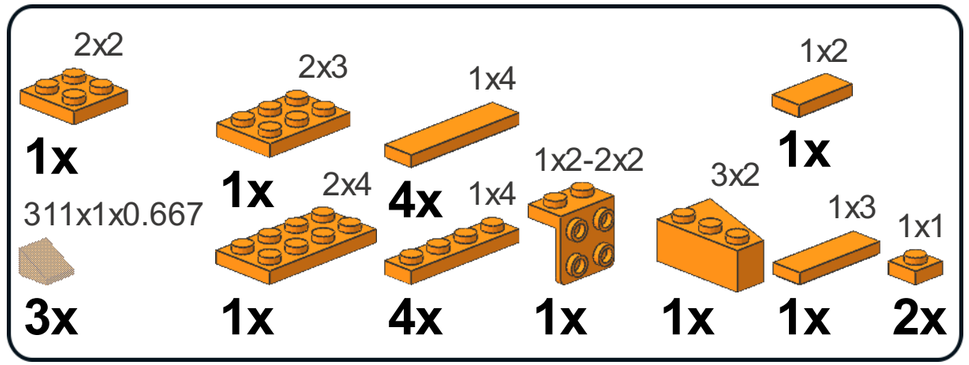

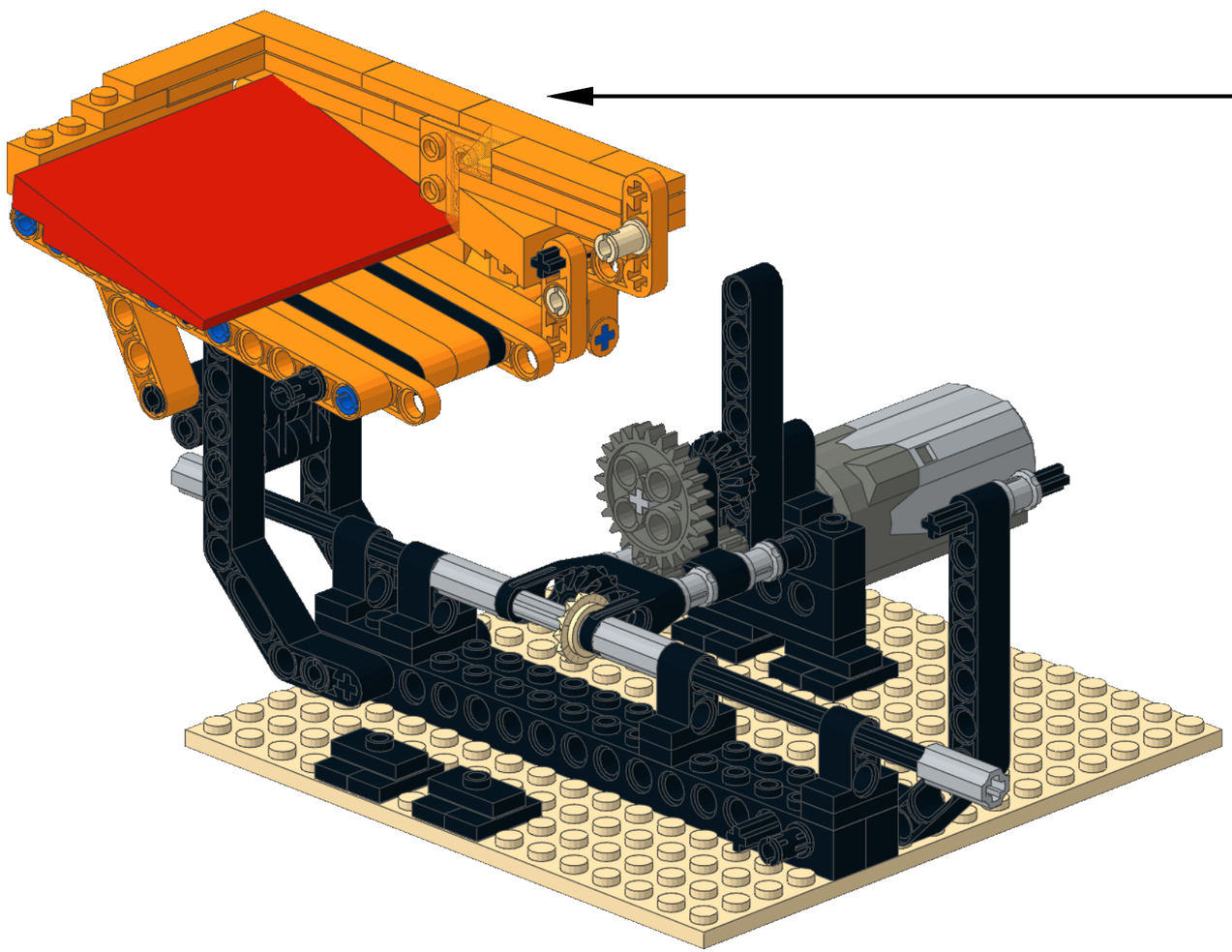

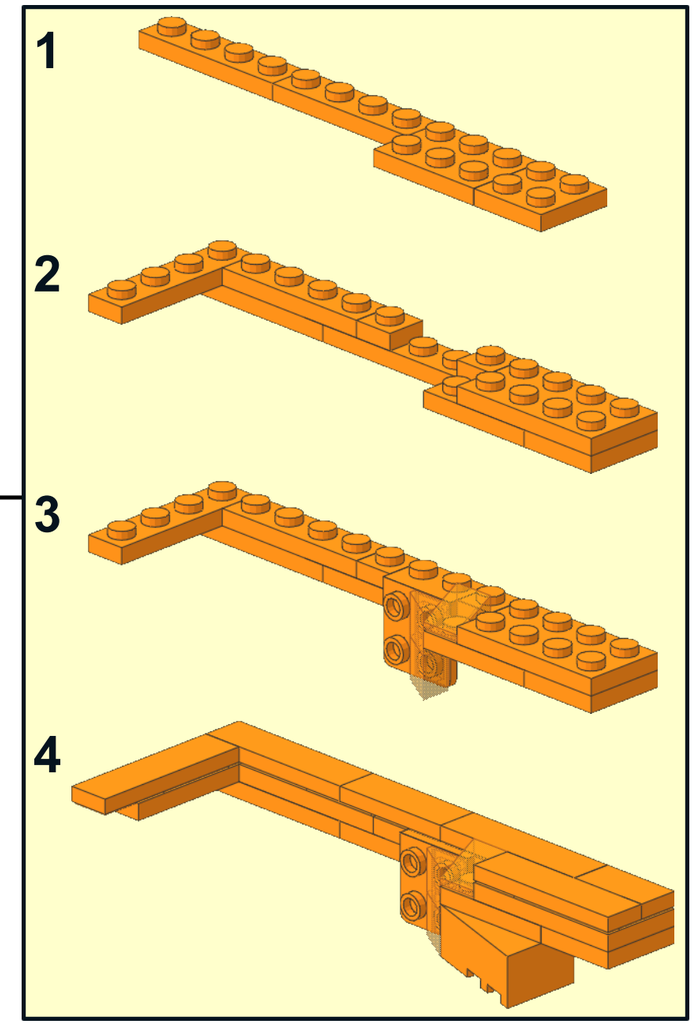

Copyright © 2016 by Maico Arts

18

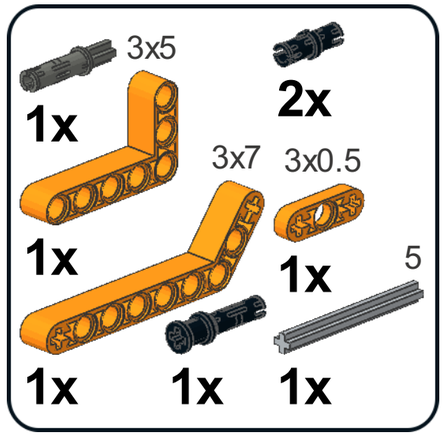

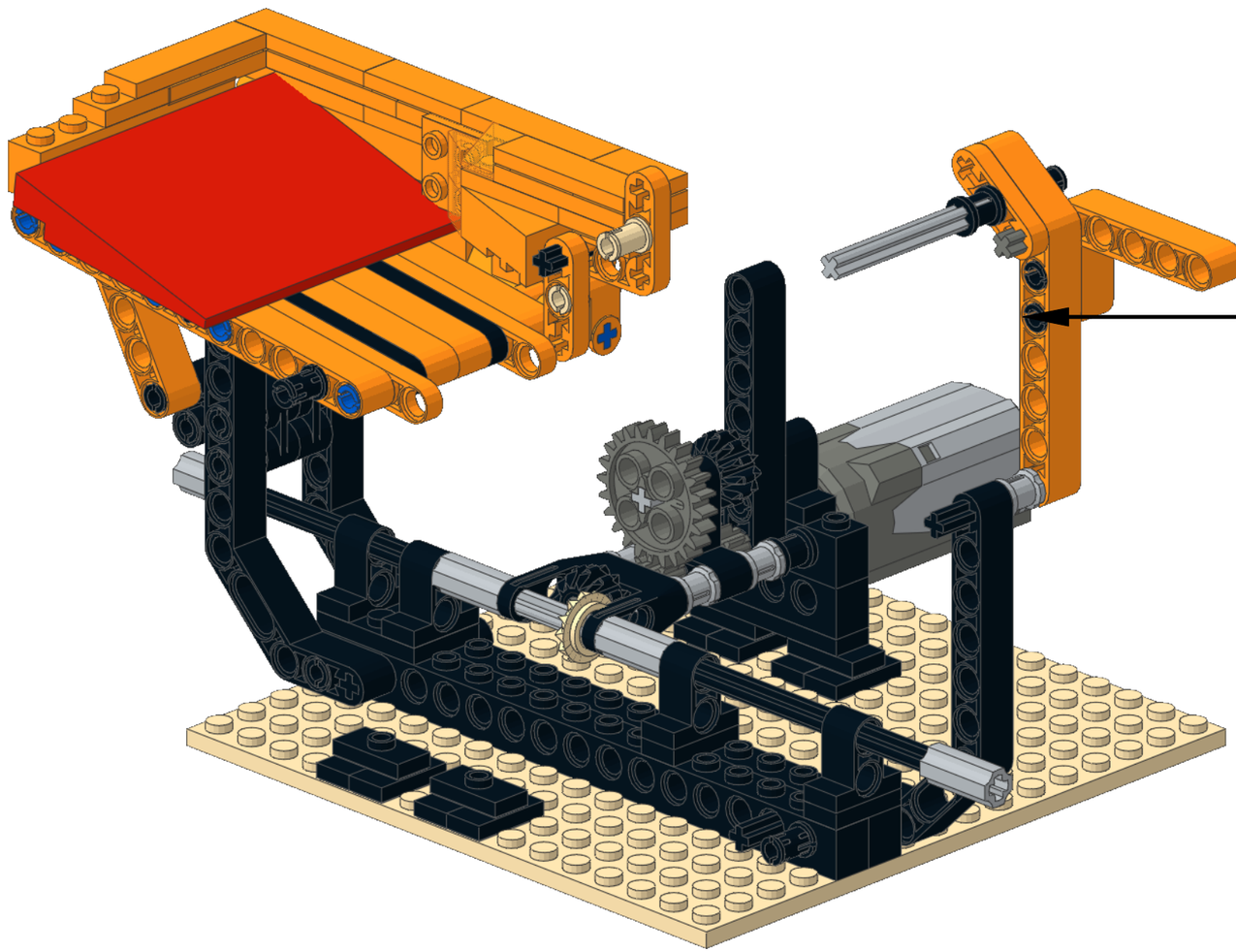

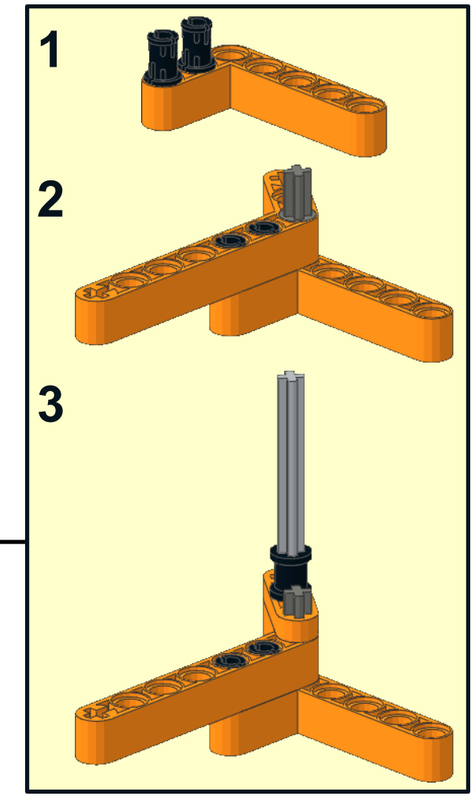

Copyright © 2016 by Maico Arts

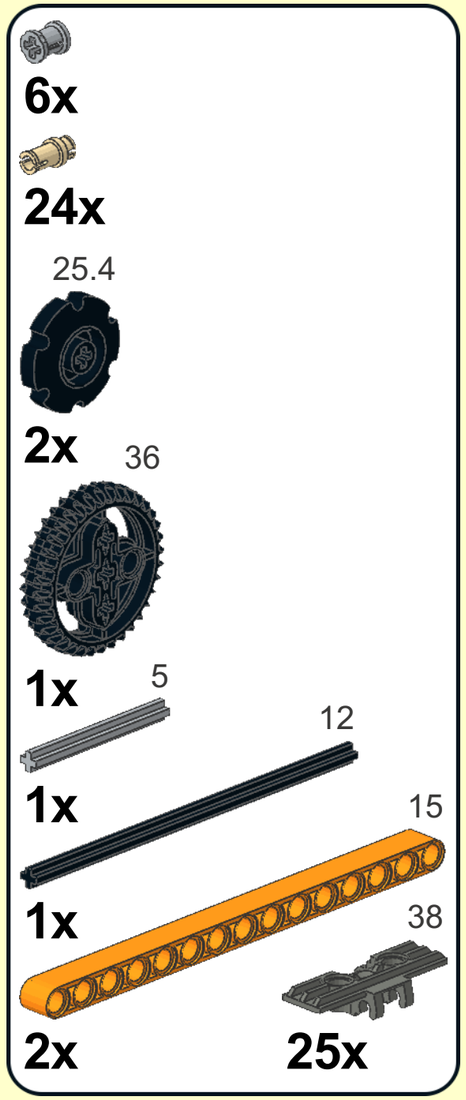

1

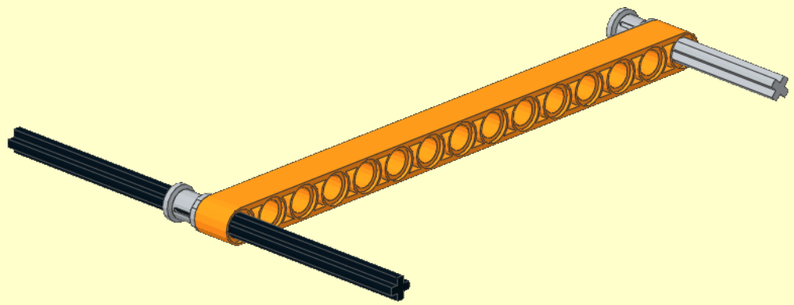

2

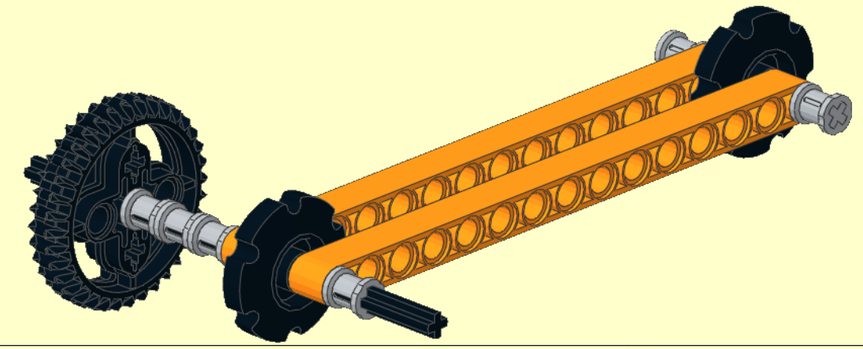

3

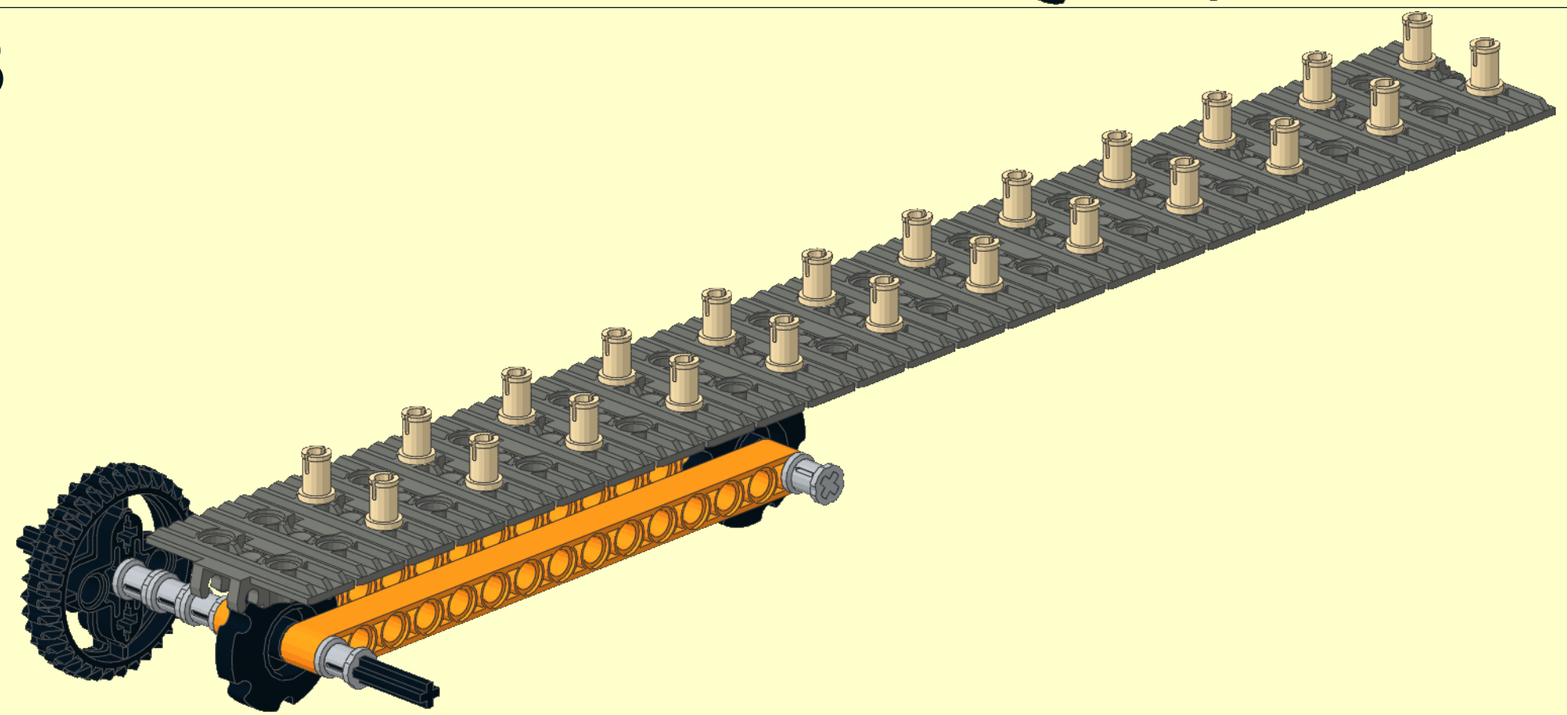

4

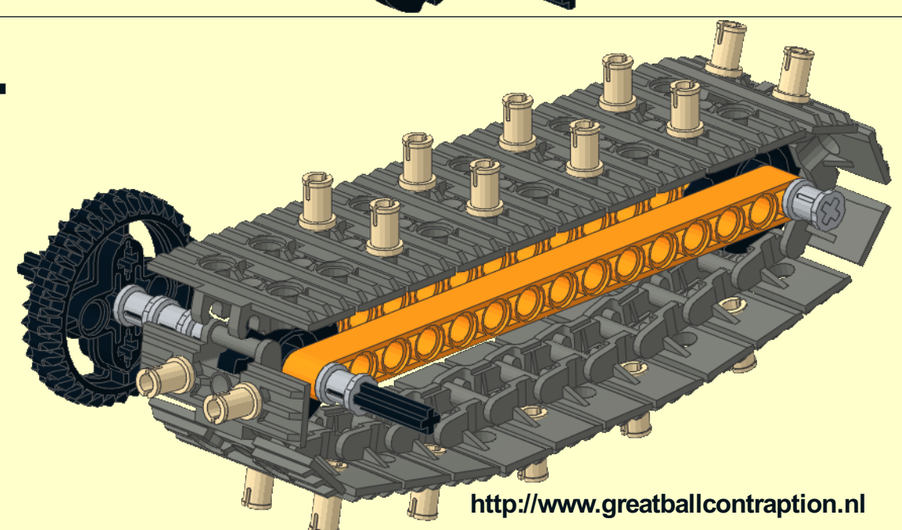

5

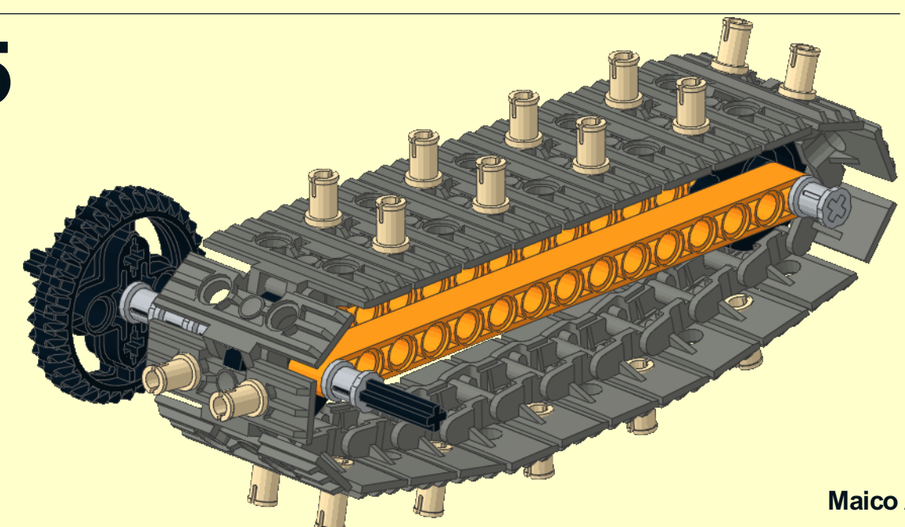

Copyright © 2016 by Maico Arts

lego@t-hok.nl

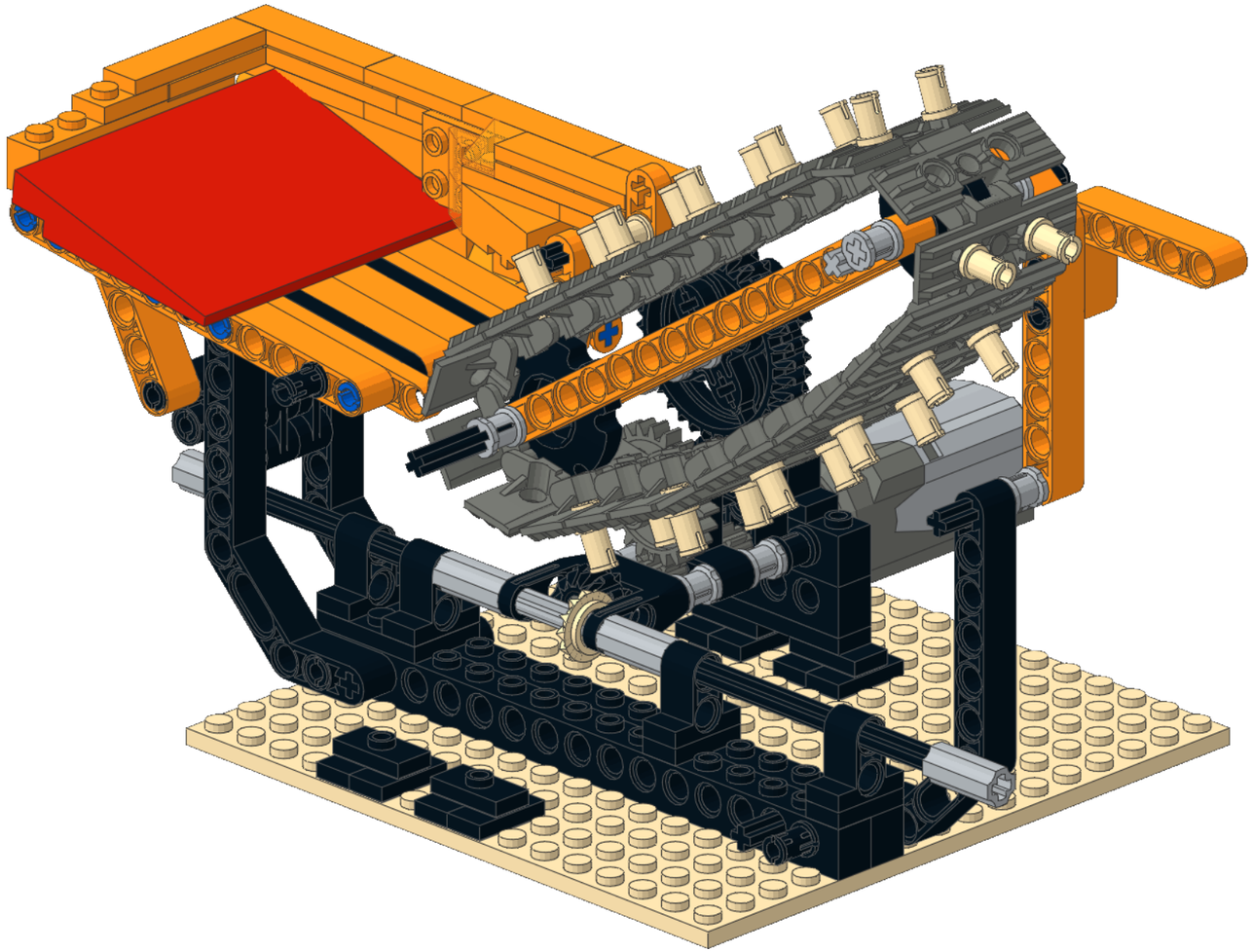

Copyright © 2016 by Maico Arts

20

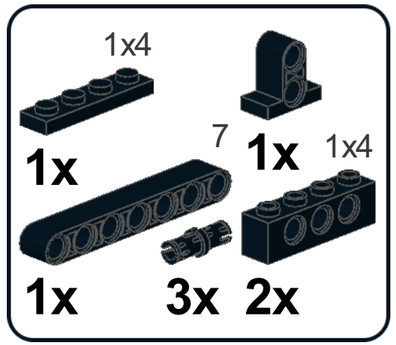

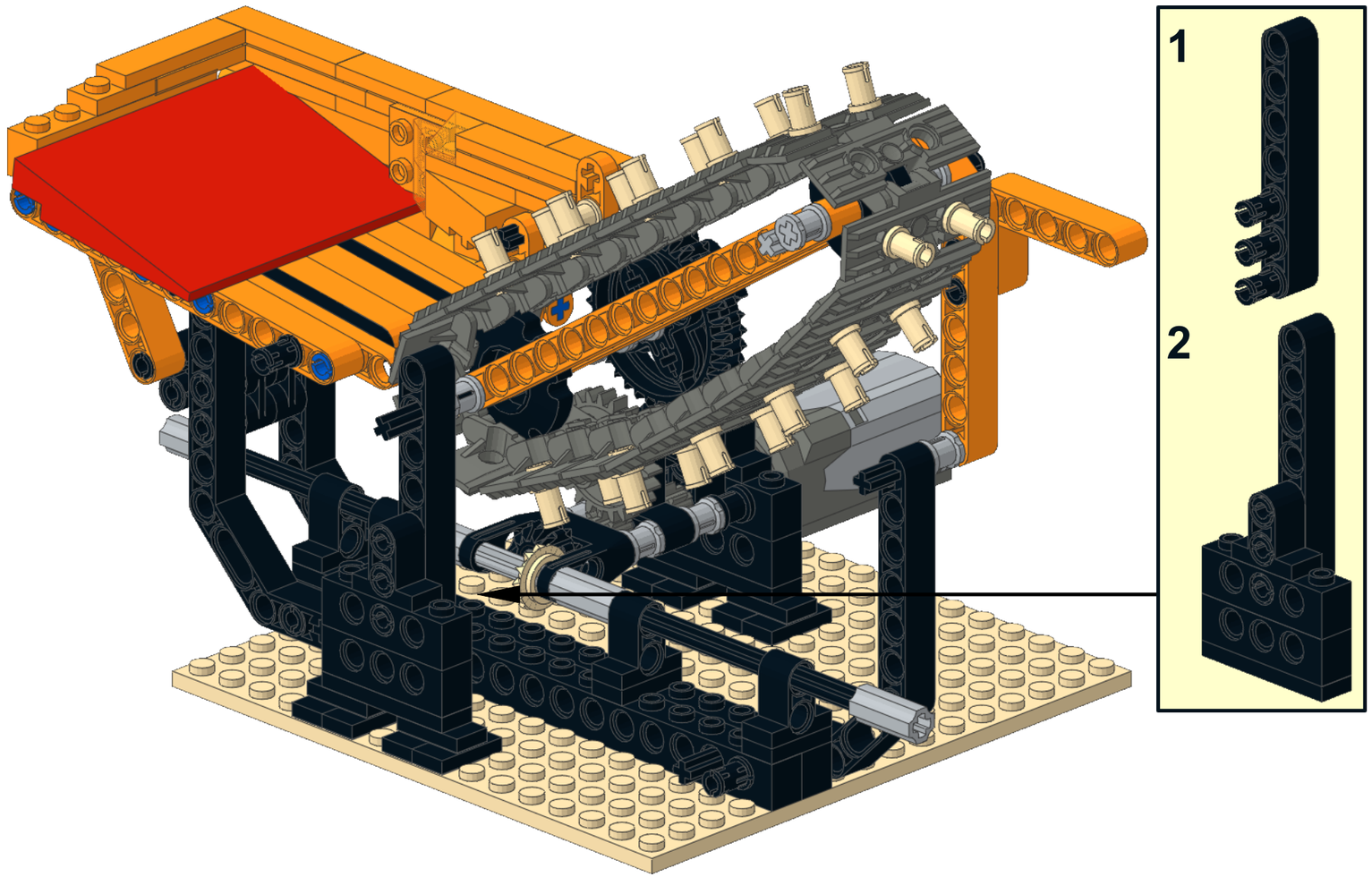

Copyright © 2016 by Maico Arts

lego@t-hok.nl

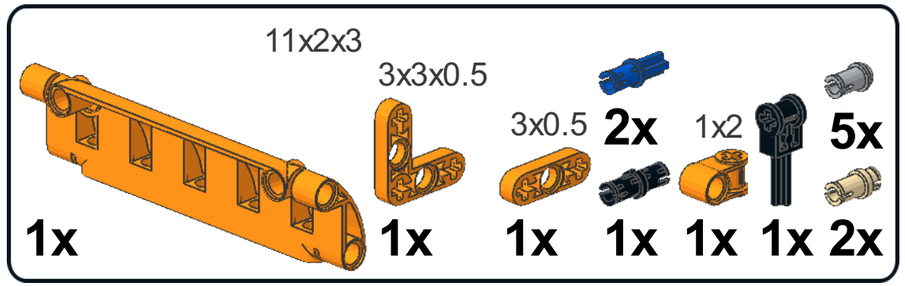

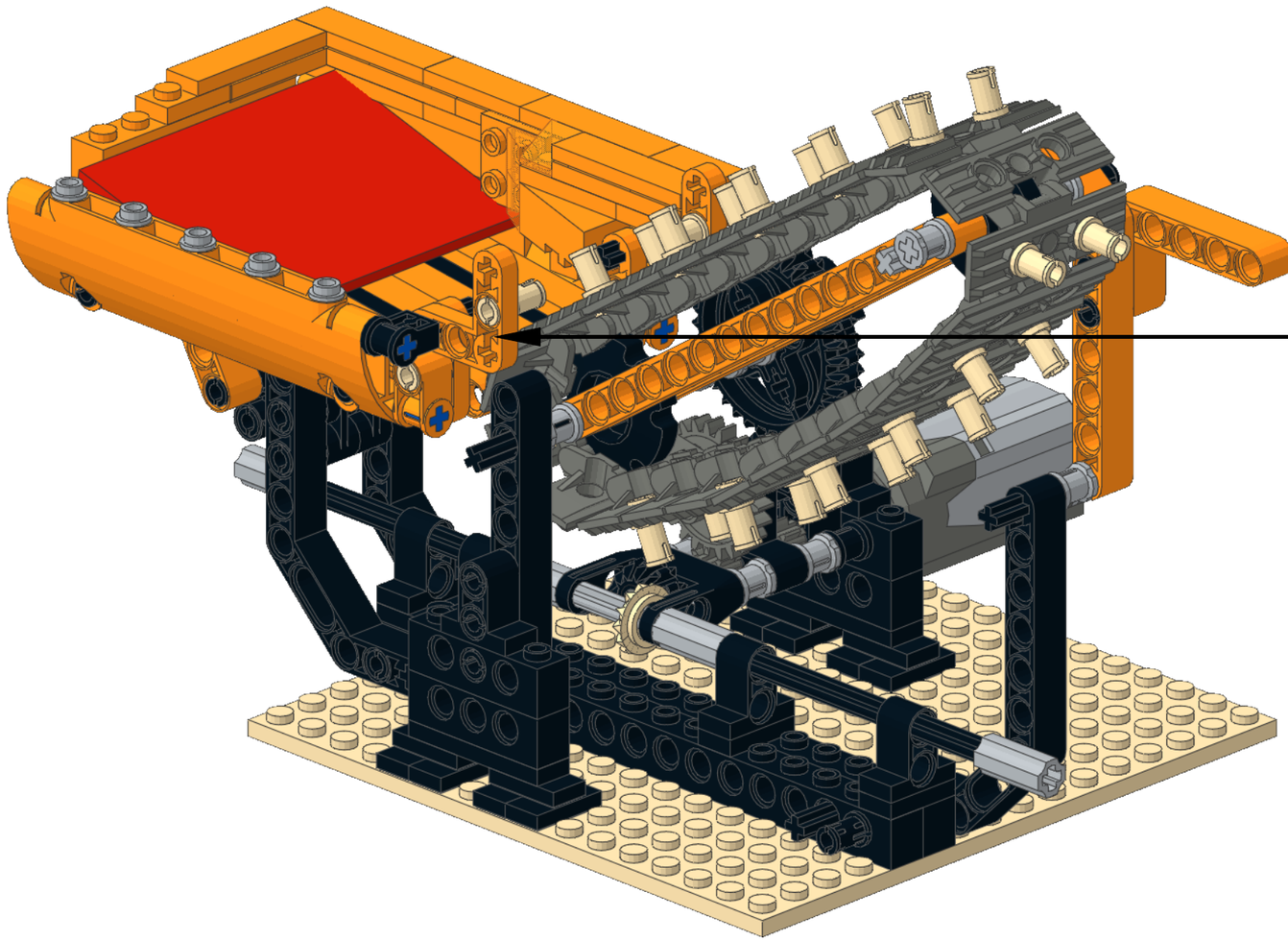

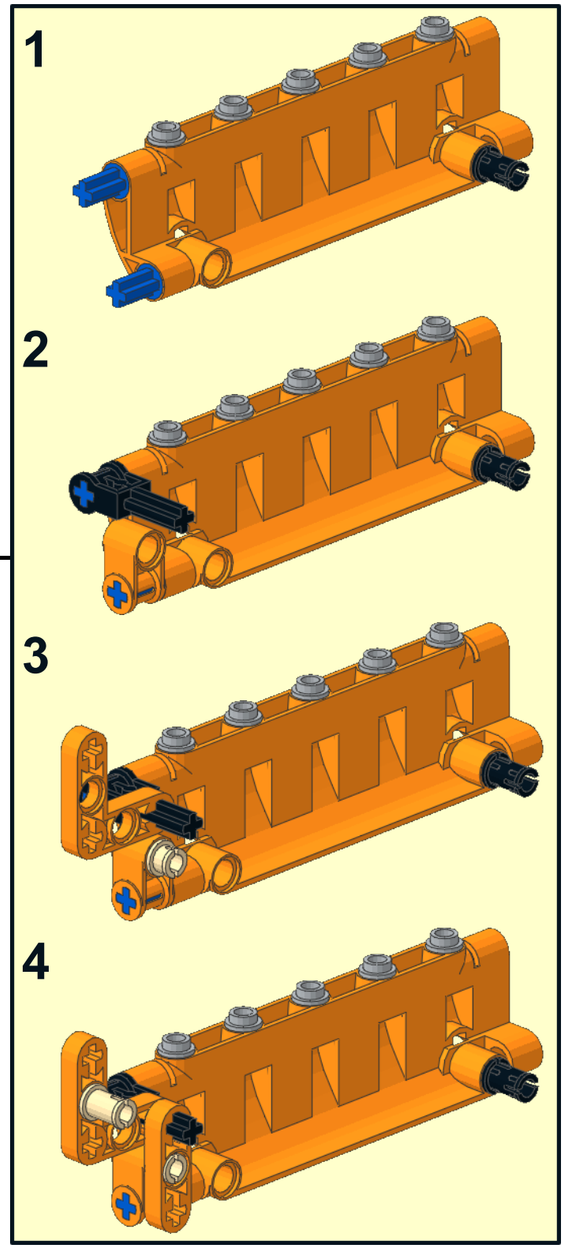

Copyright © 2016 by Maico Arts

lego@t-hok.nl

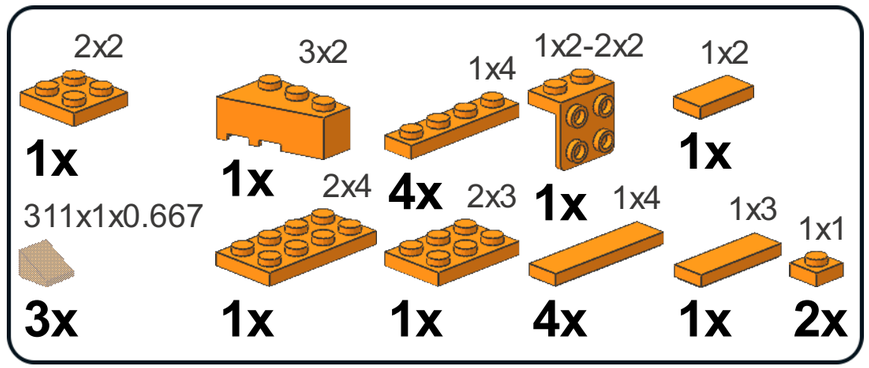

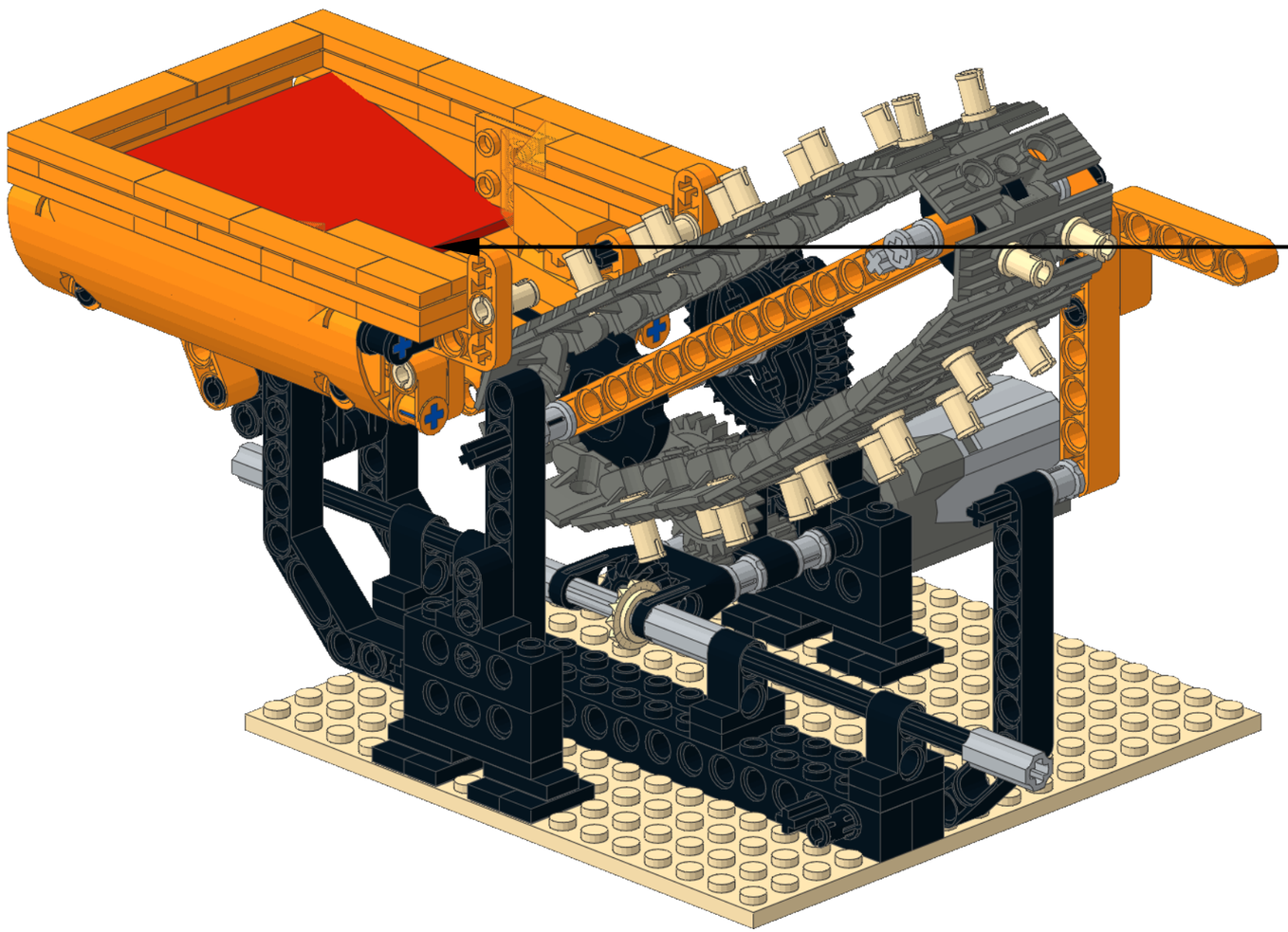

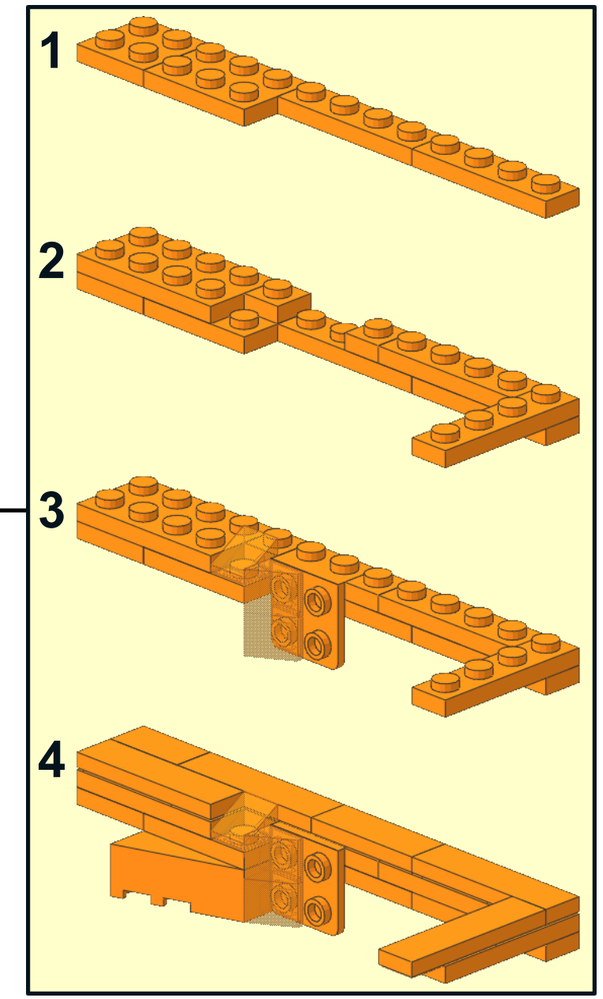

Copyright © 2016 by Maico Arts

23

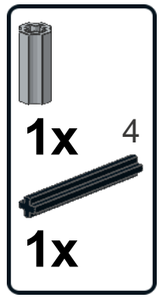

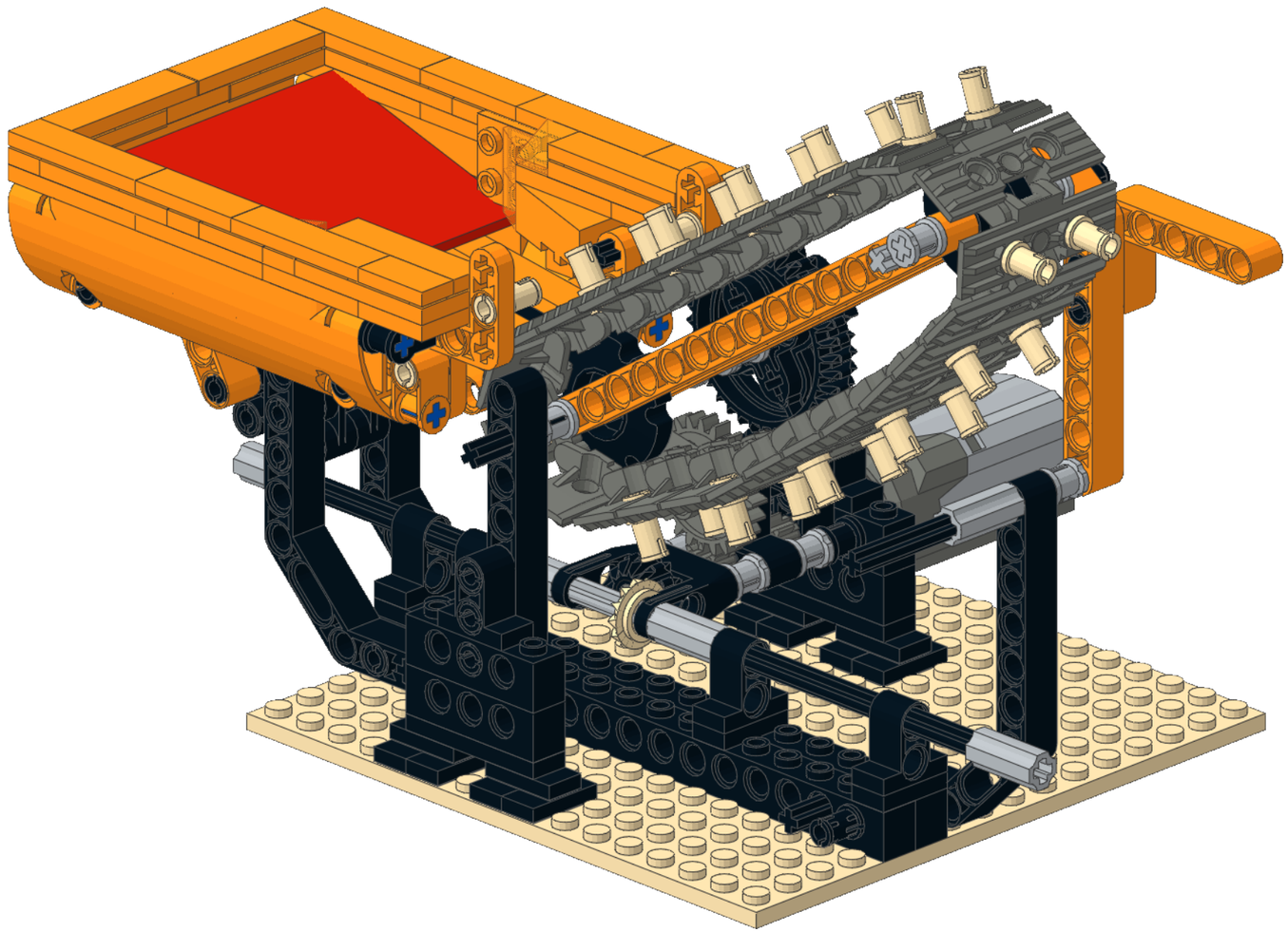

Copyright © 2016 by Maico Arts

24

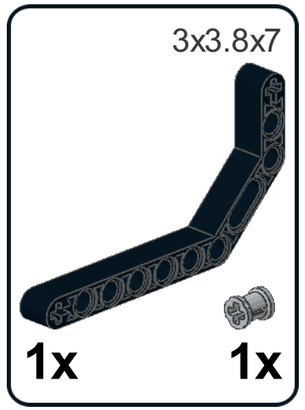

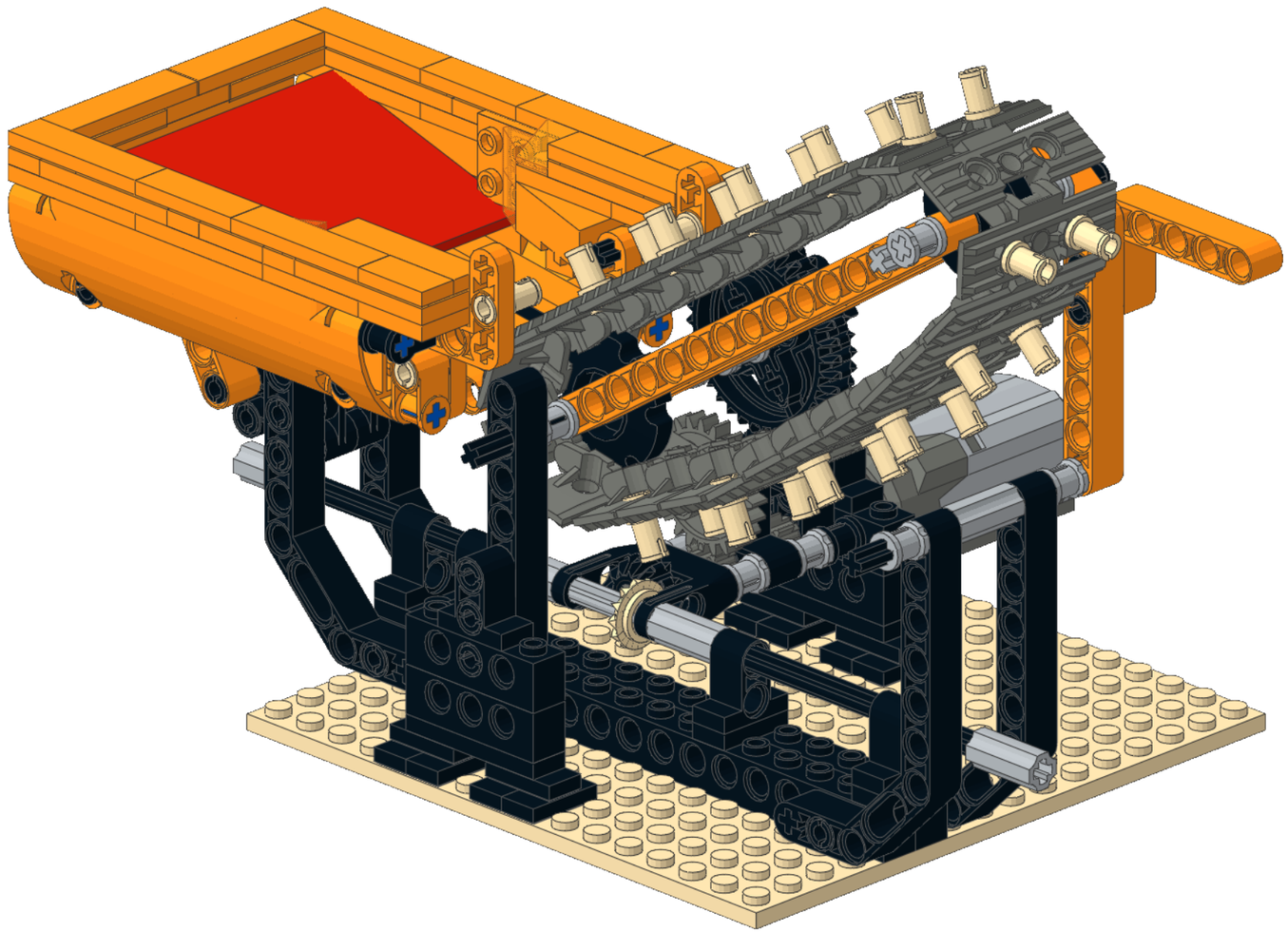

Copyright © 2016 by Maico Arts

1

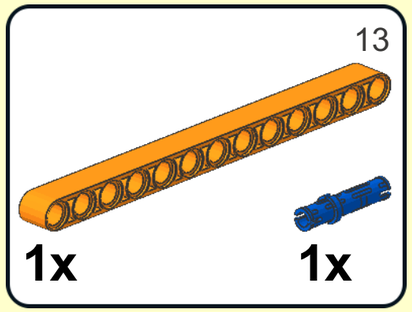

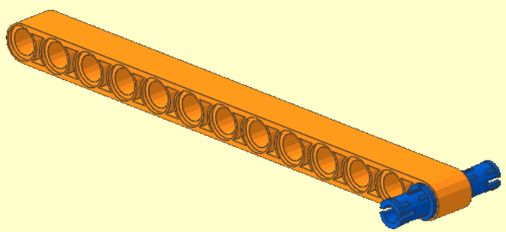

2

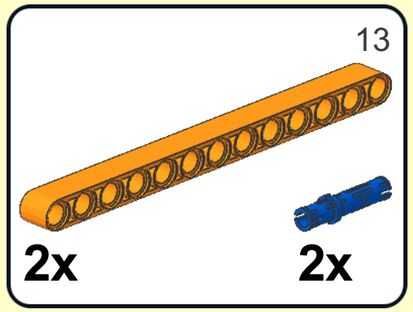

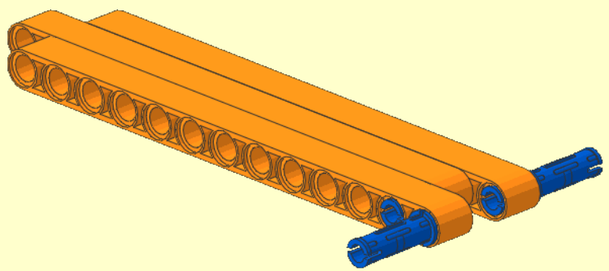

3

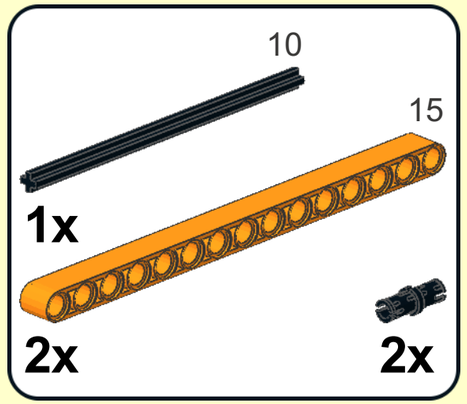

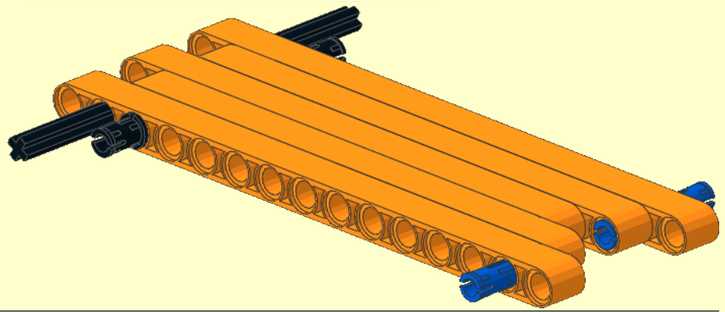

4

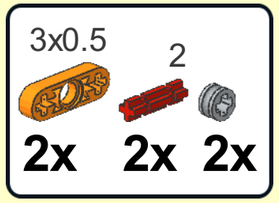

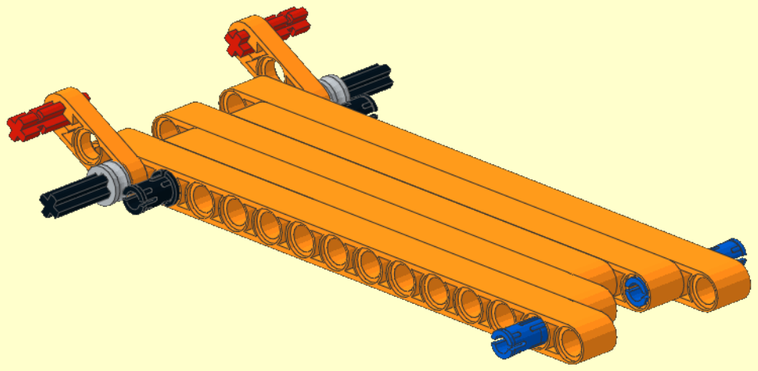

5

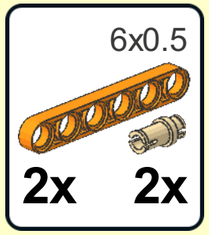

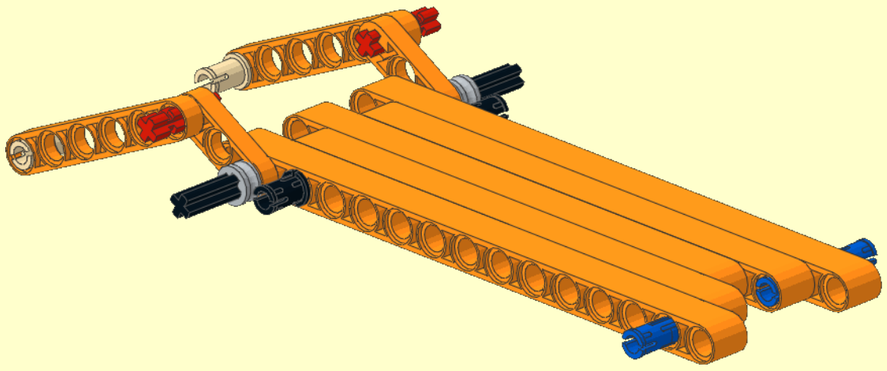

6

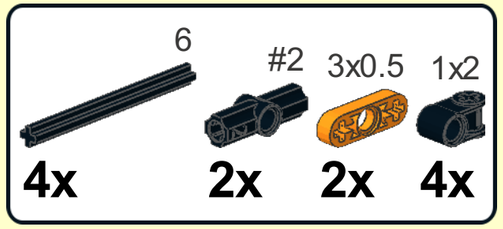

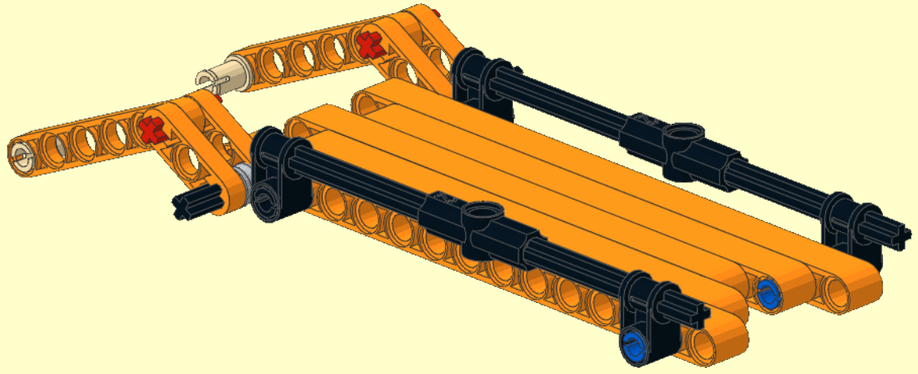

Copyright © 2016 by Maico Arts

lego@t-hok.nl

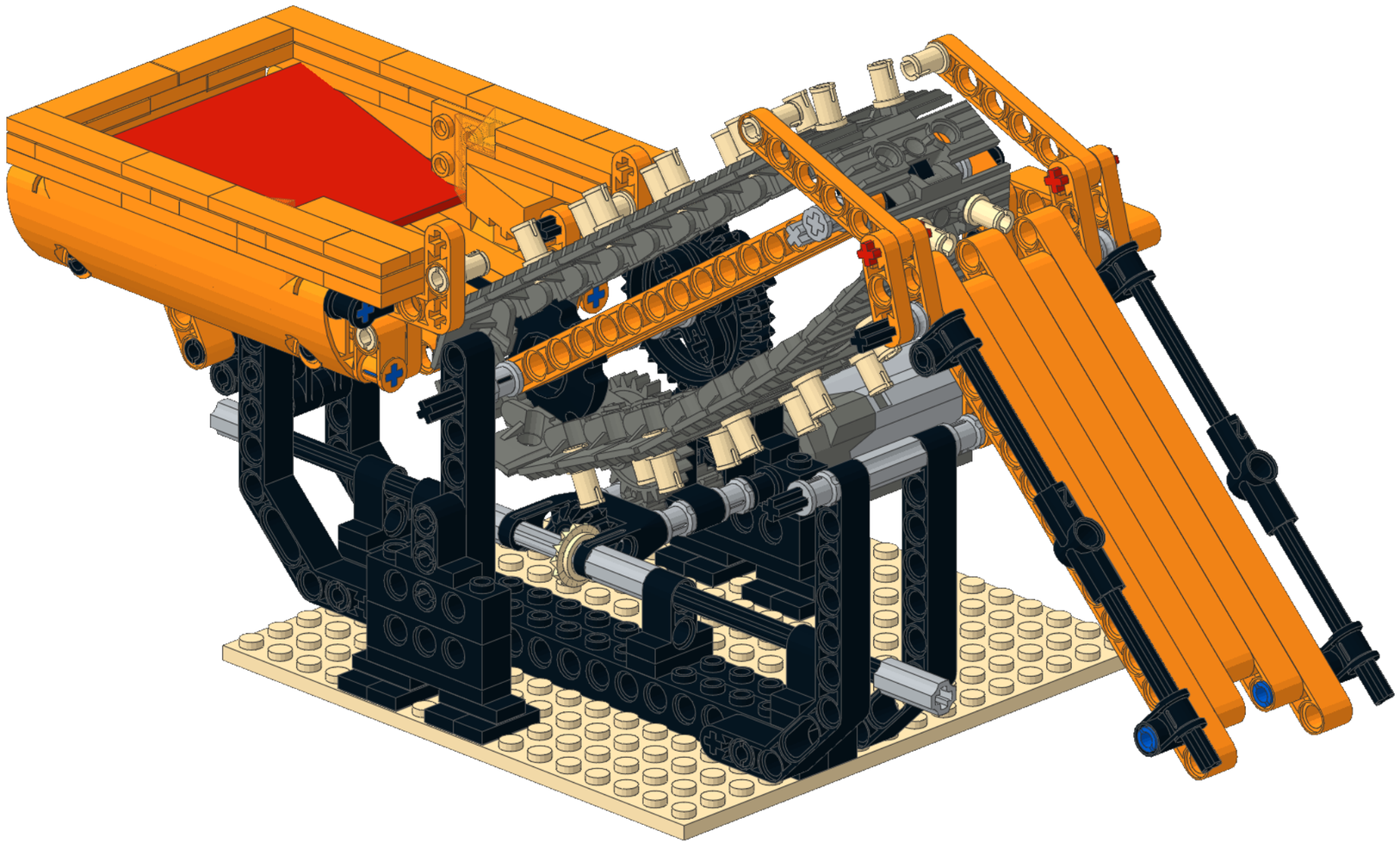

Copyright © 2016 by Maico Arts

26

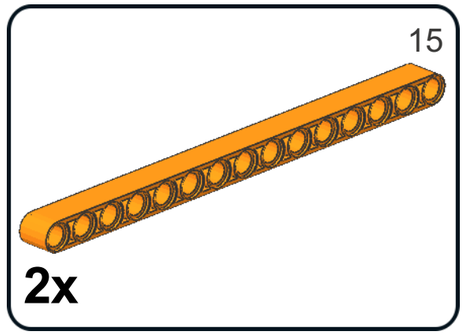

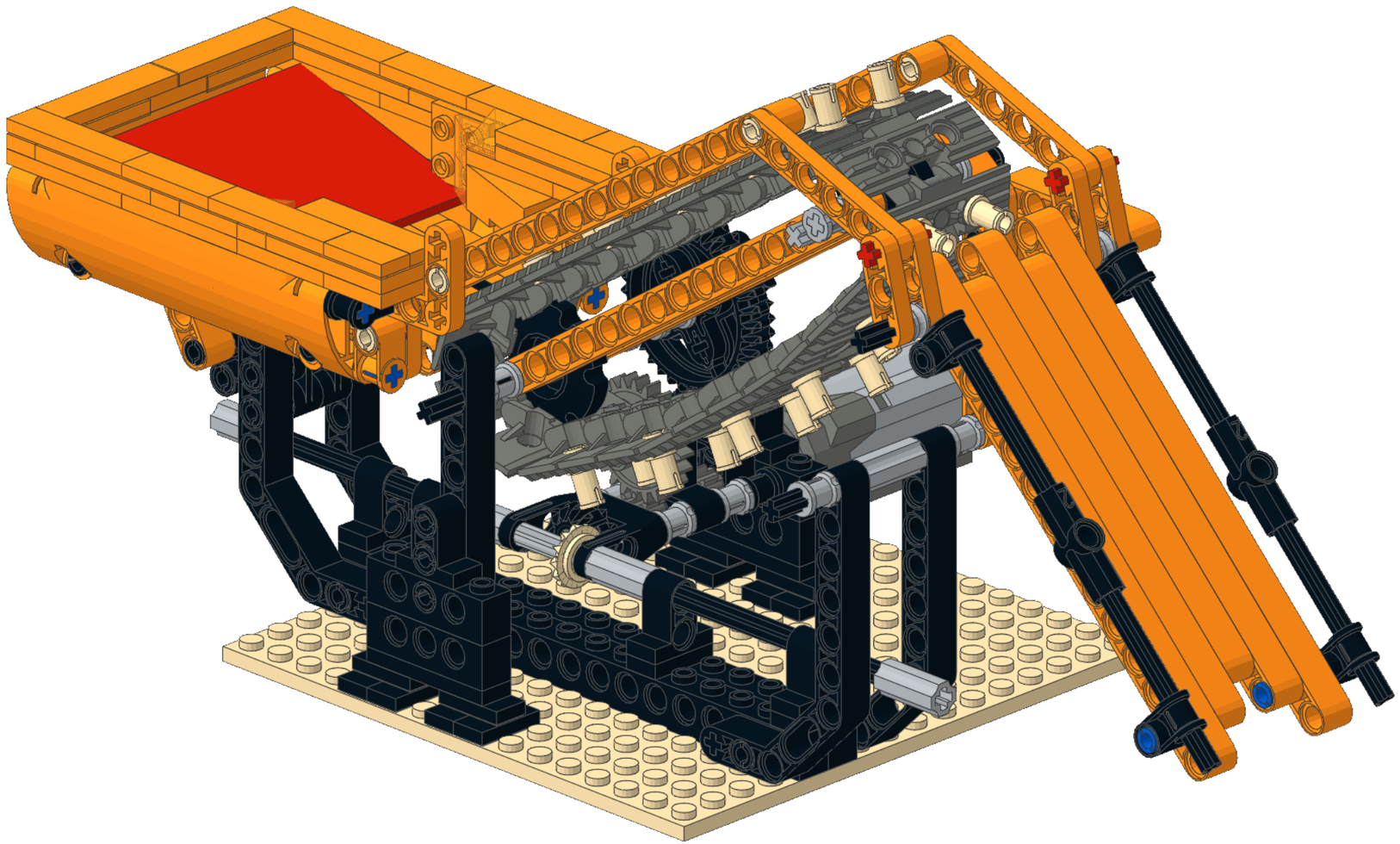

Copyright © 2016 by Maico Arts

lego@t-hok.nl

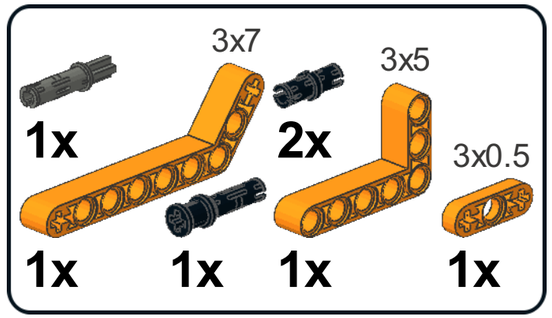

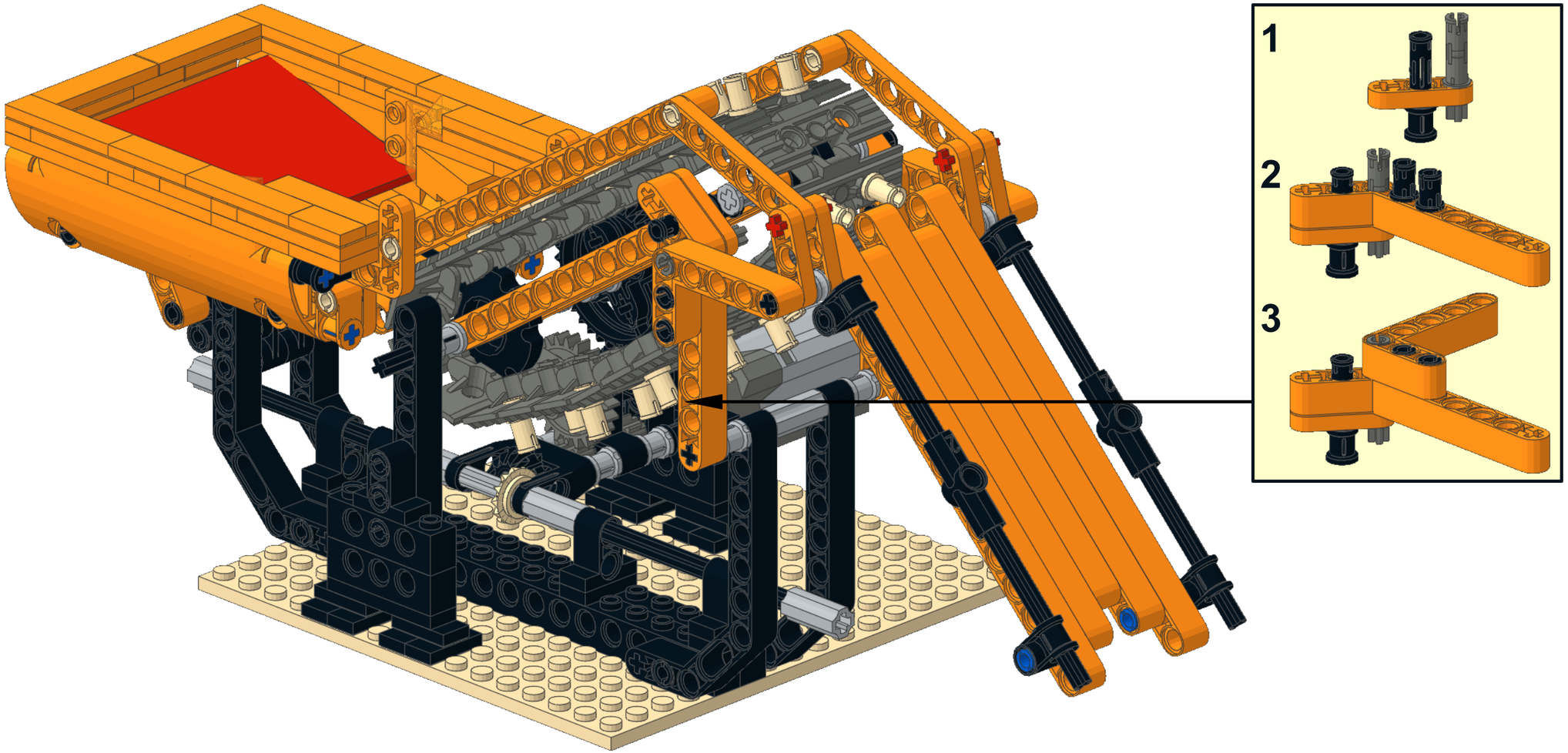

Copyright © 2016 by Maico Arts

orange-mini-conveyor

Model instructions by Maico Arts

Copyright © 2016

http://www.greatballcontraption.nl

lego@t-hok.nl

LEGO® is a registered trademark of the LEGO Group, which does not sponsor, endorse, or authorize these instructions or the model they depict.

Instructions configured and generated using LPub3D 1.3.5.615.2
Download LPub3D at http://sourceforge.net/projects/lpub3d/