grijze-pin-lifter

Model instructions by Maico Arts

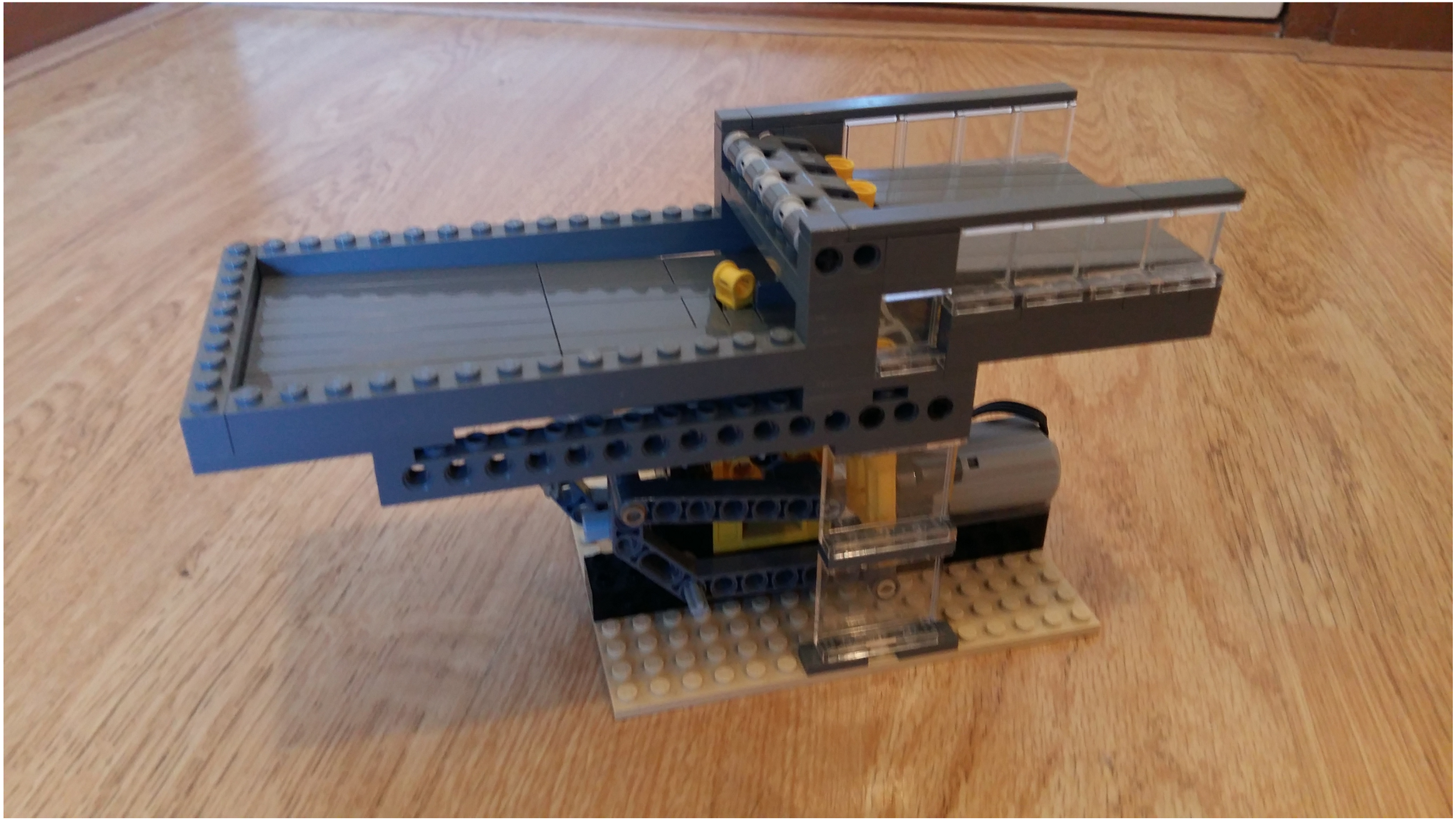

225 Pieces

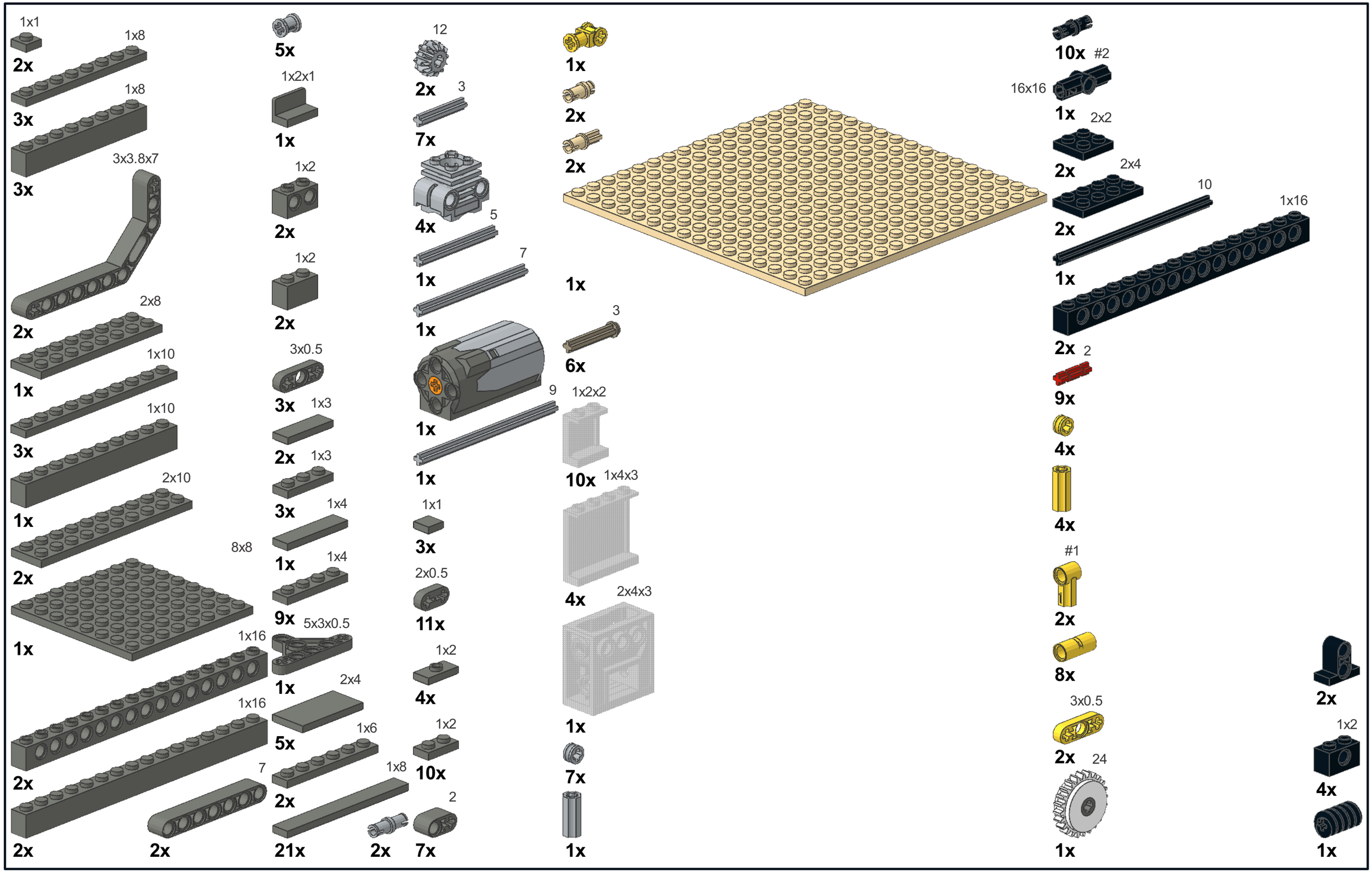

Copyright © 2016 by Maico Arts

1

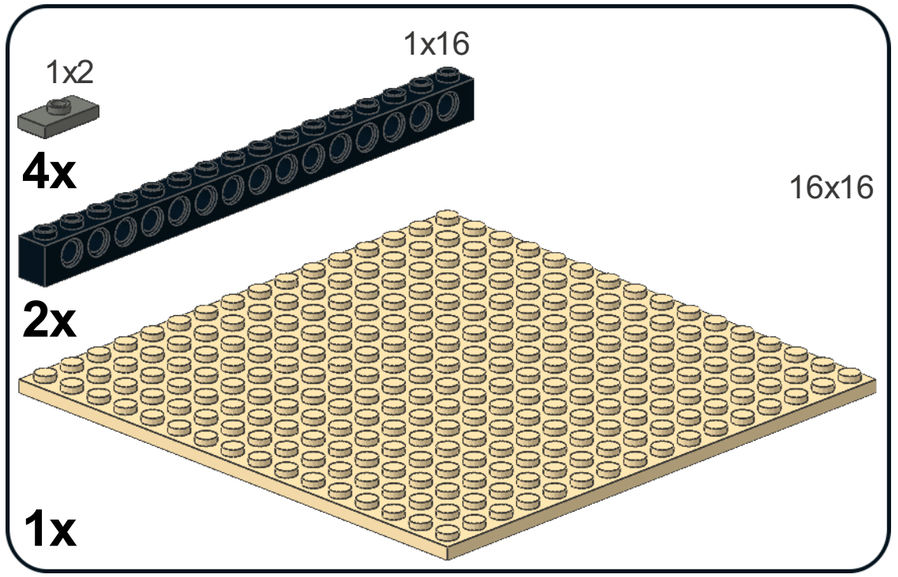

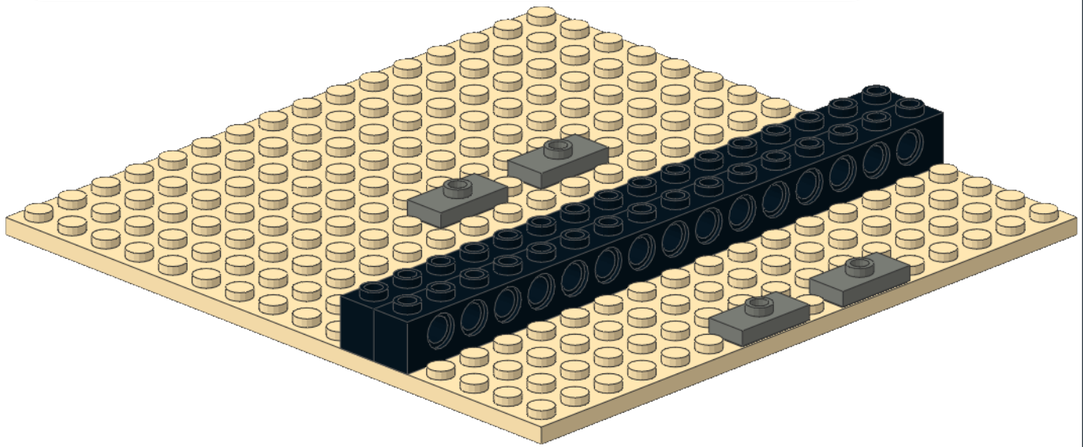

2

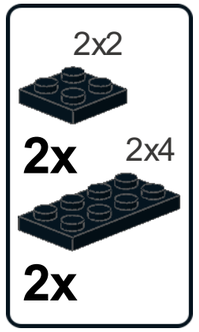

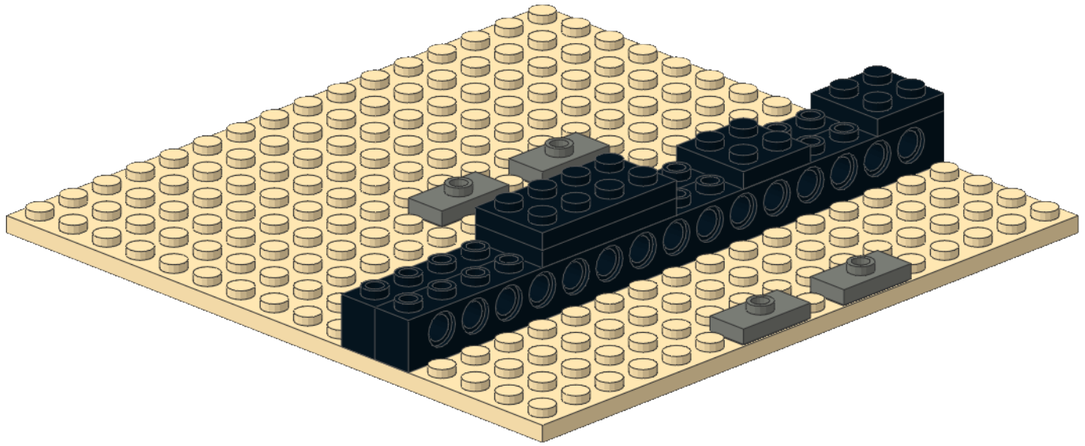

3

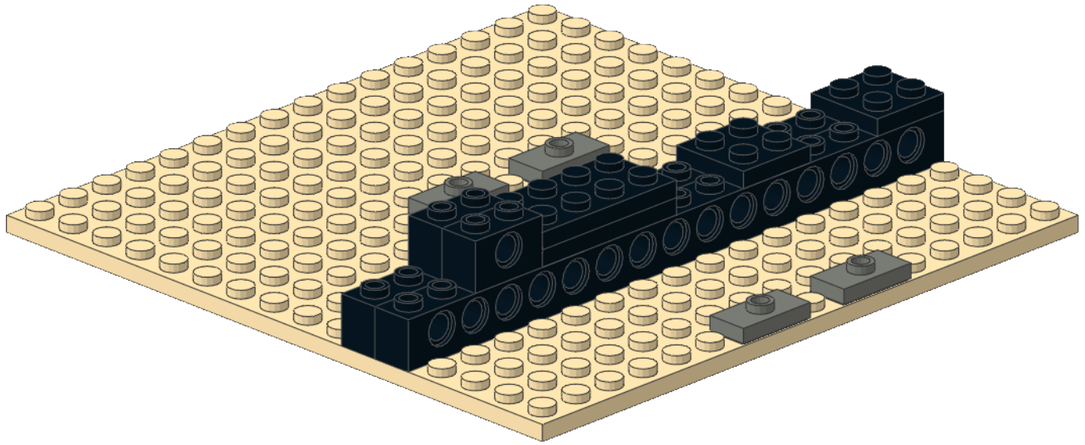

4

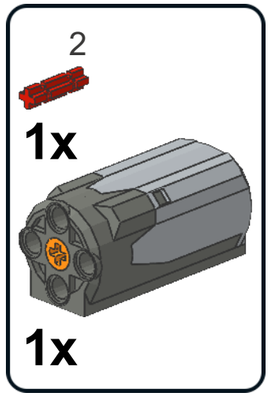

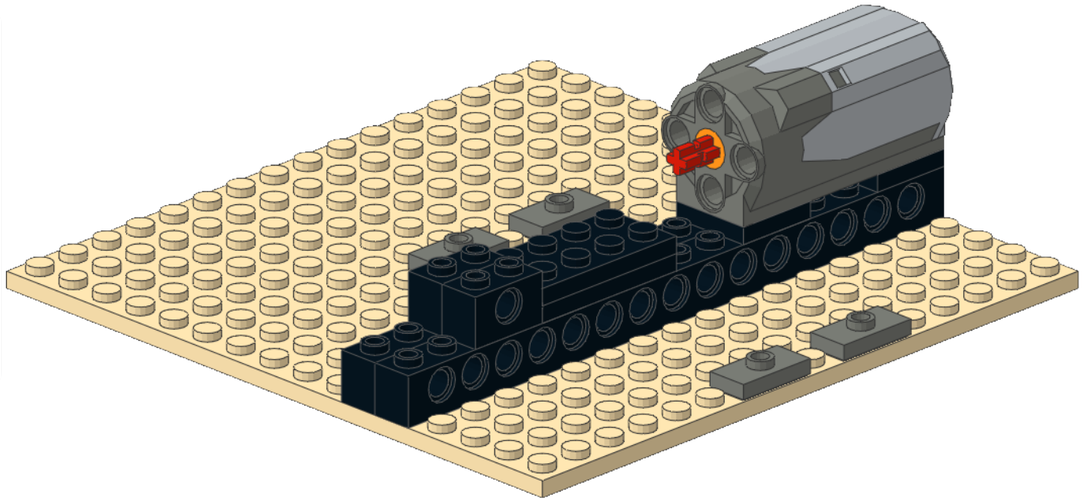

Copyright © 2016 by Maico Arts

5

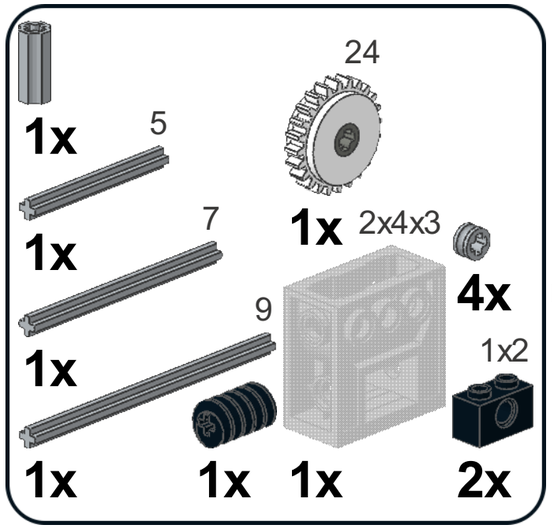

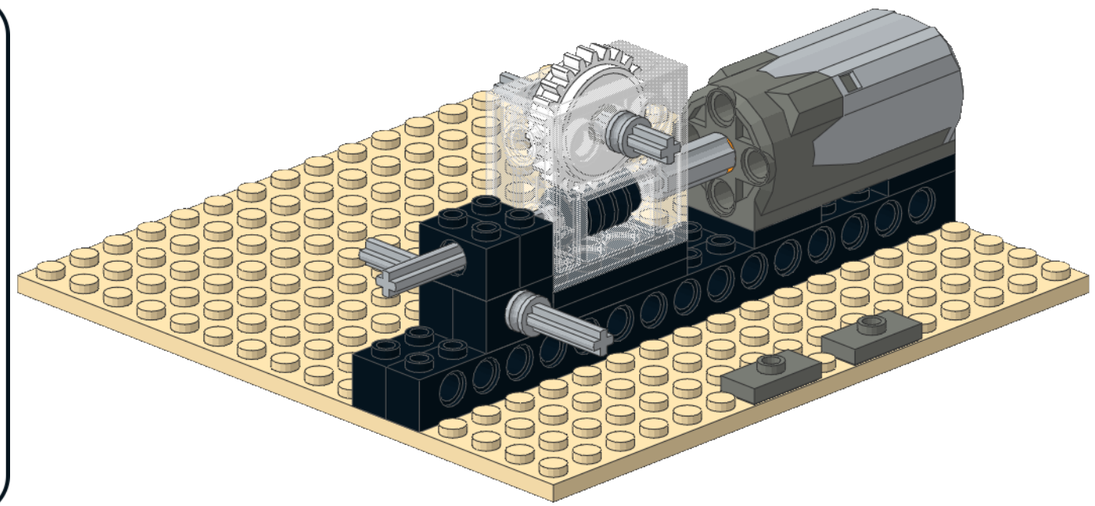

6

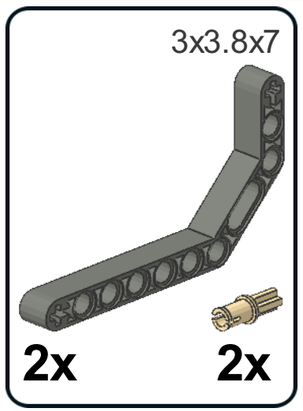

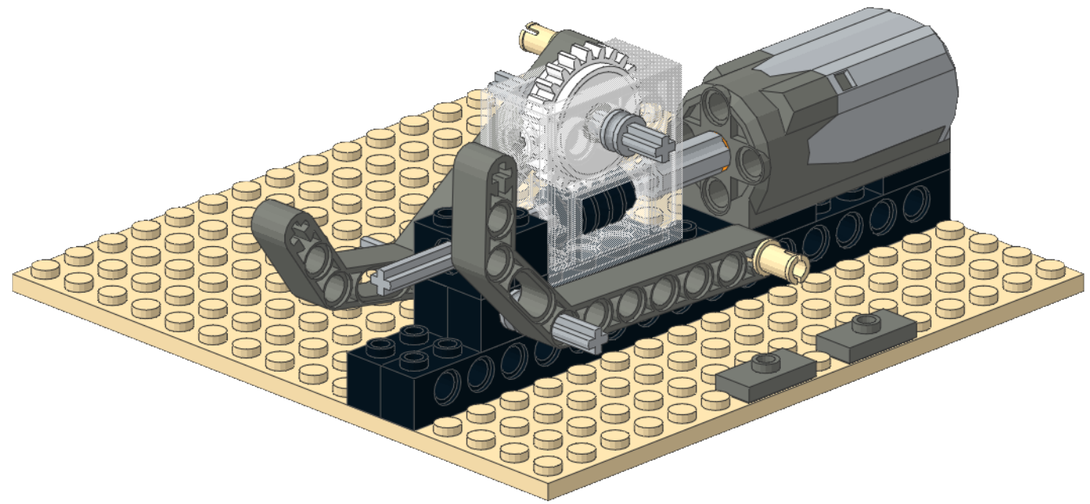

7

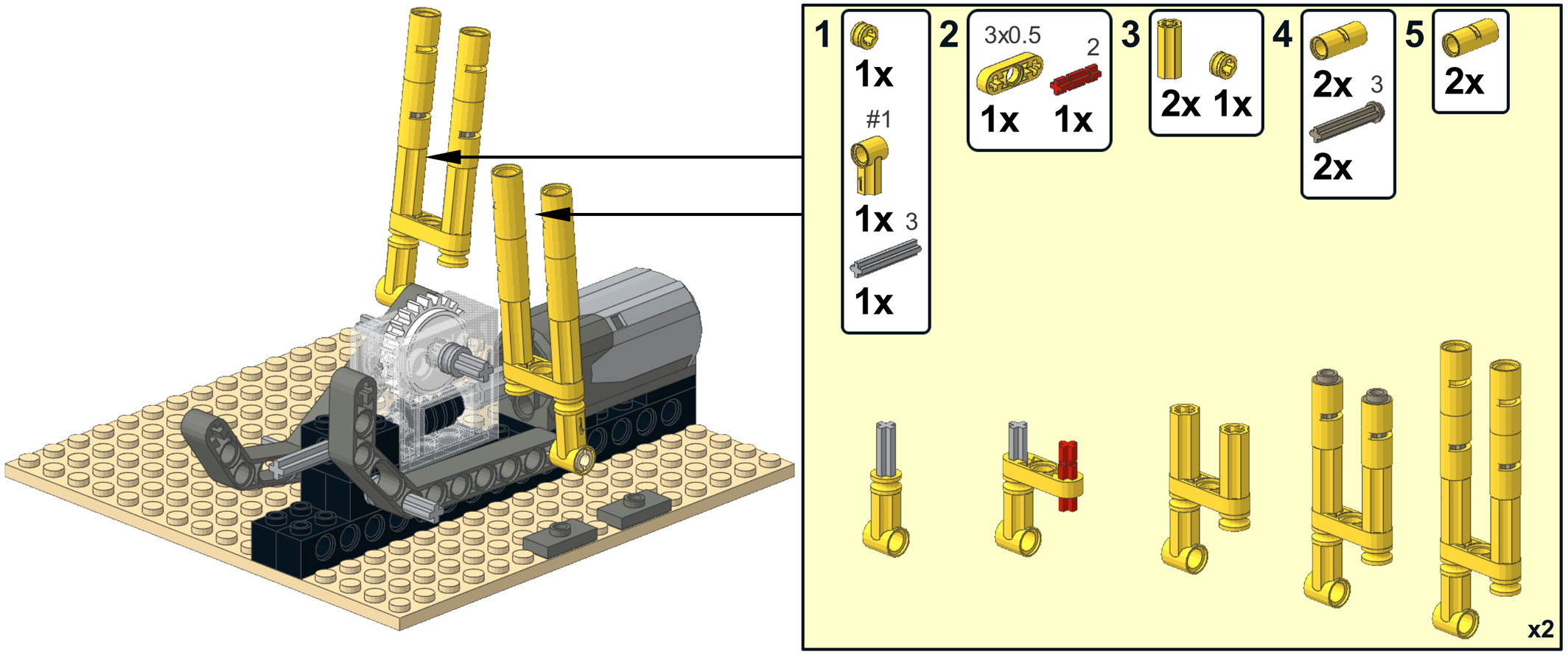

8

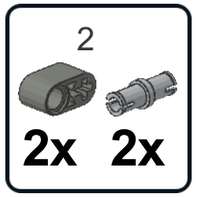

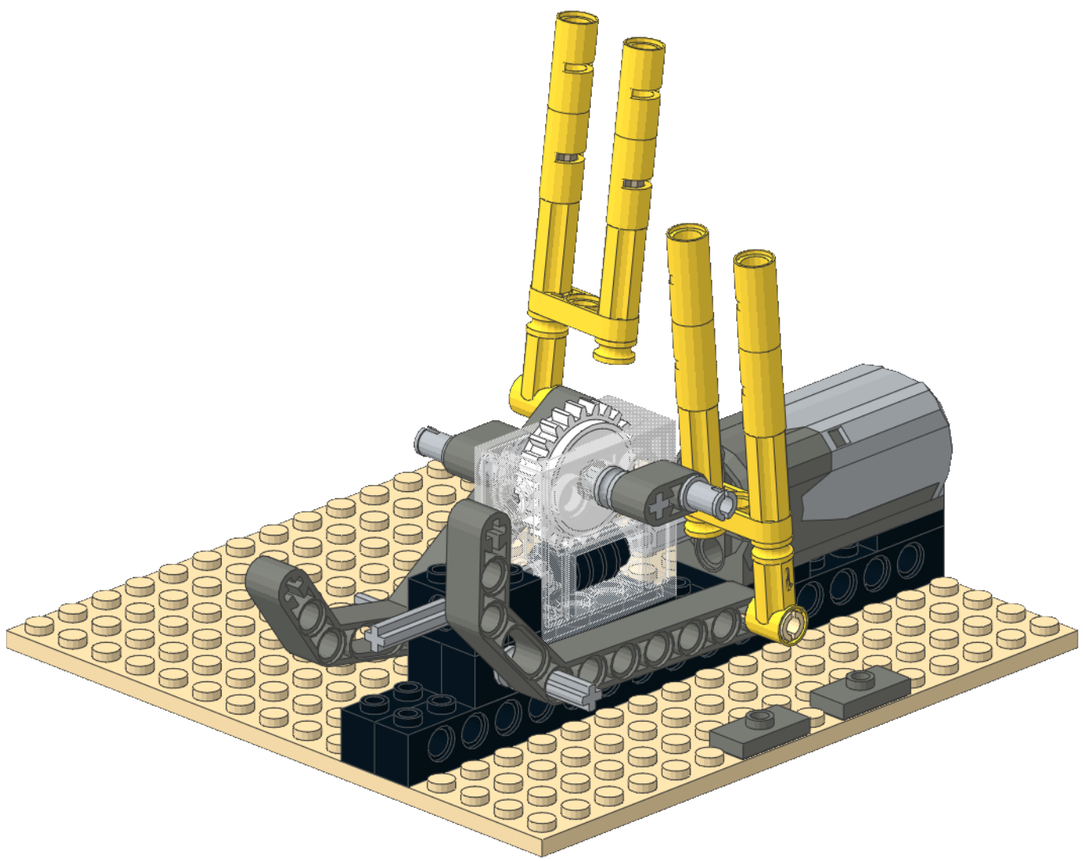

9

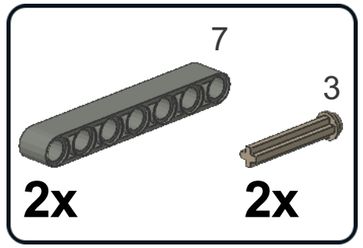

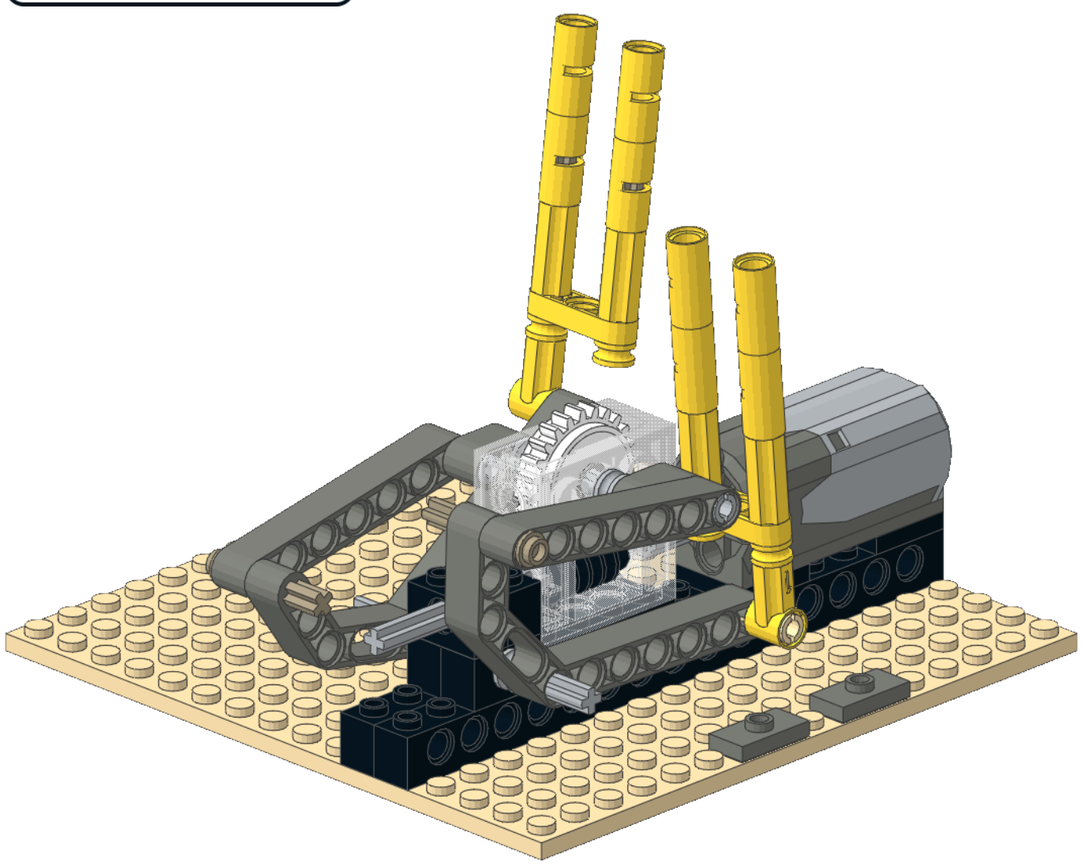

Copyright © 2016 by Maico Arts

10

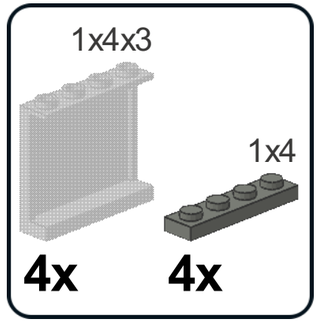

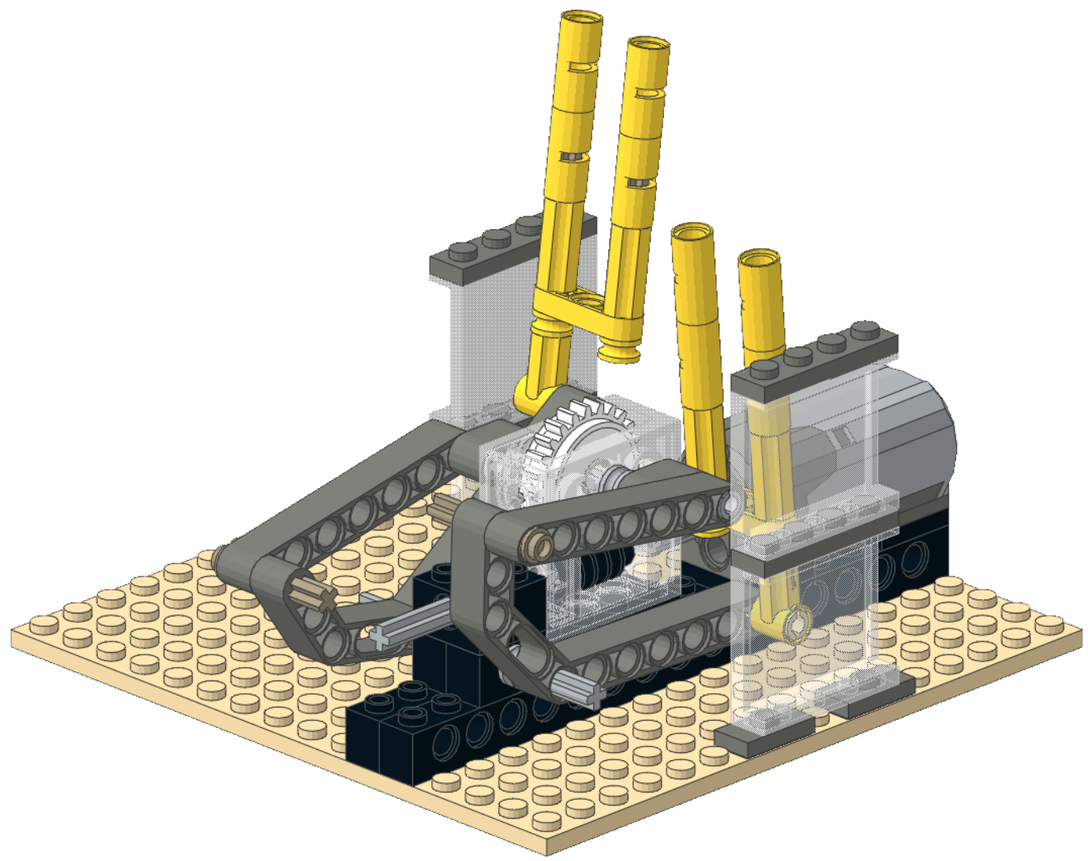

11

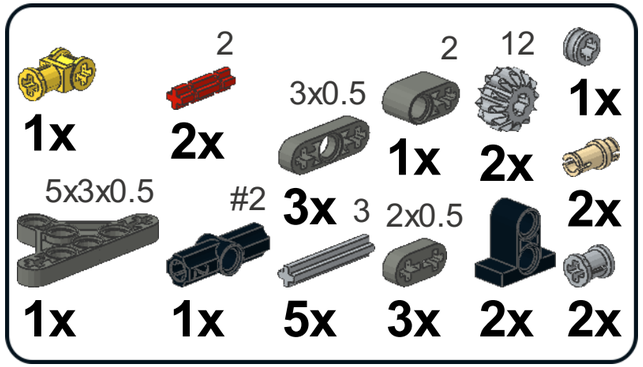

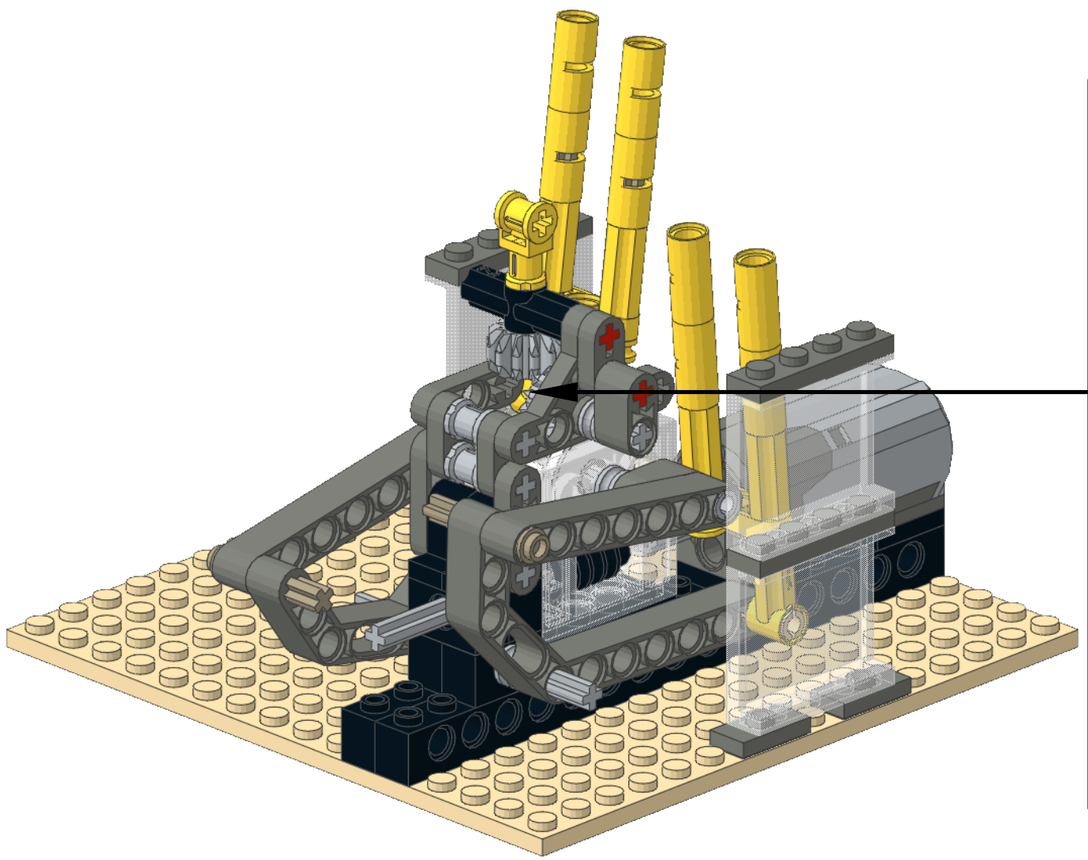

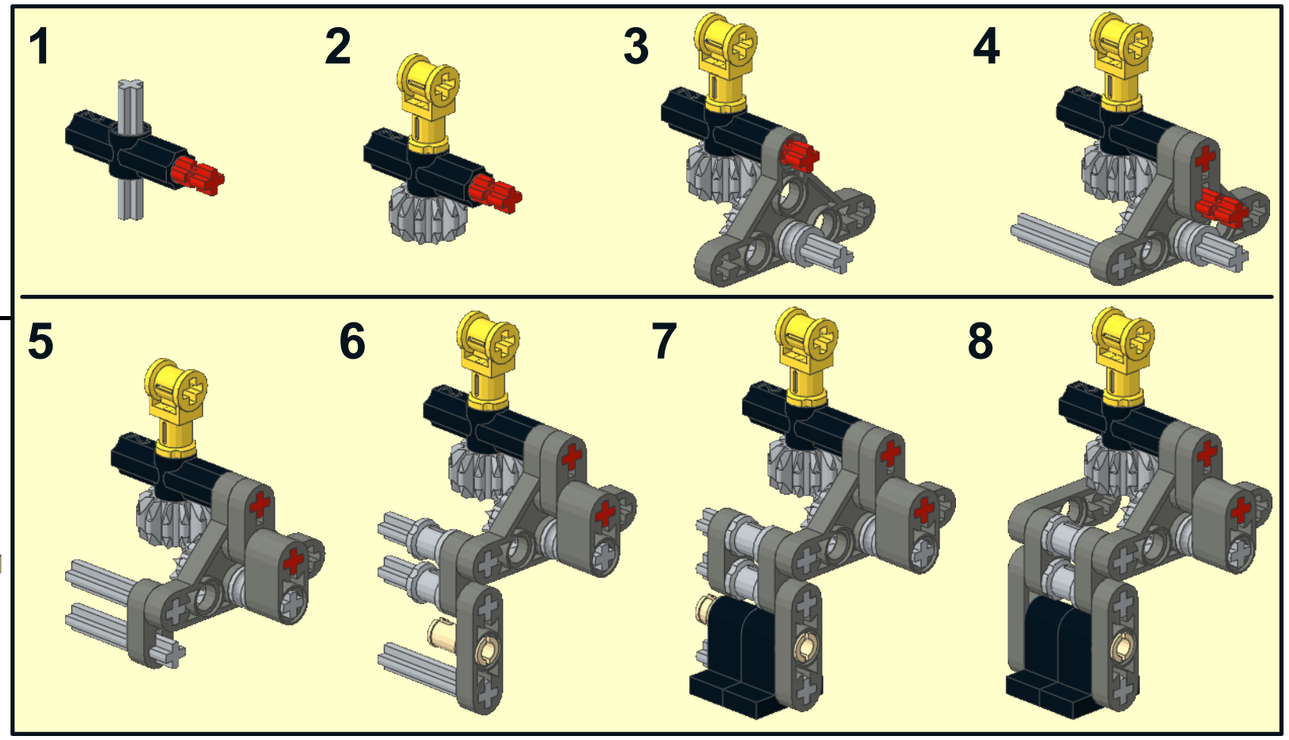

Copyright © 2016 by Maico Arts

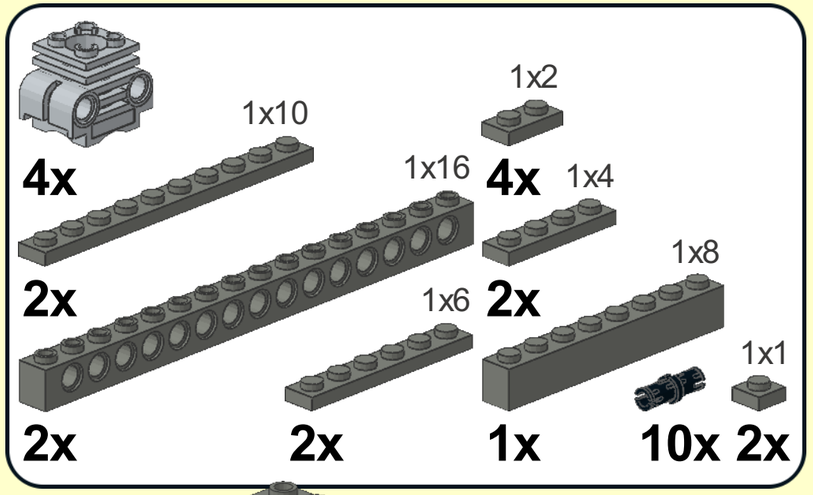

1

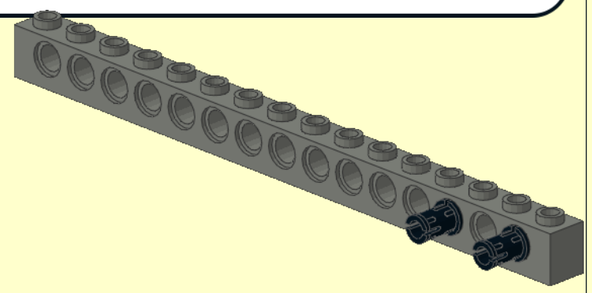

2

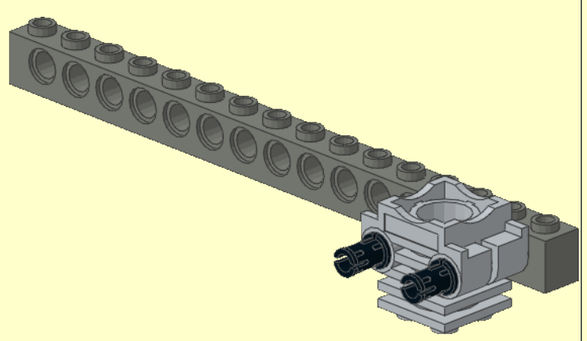

3

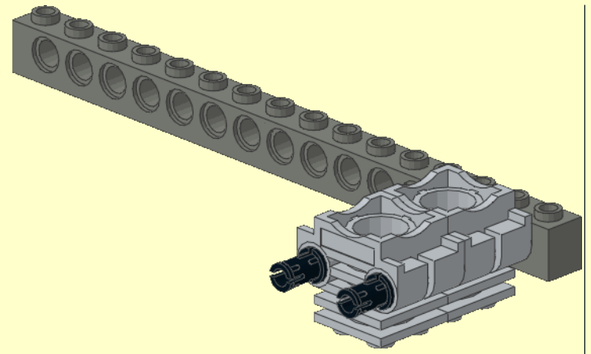

4

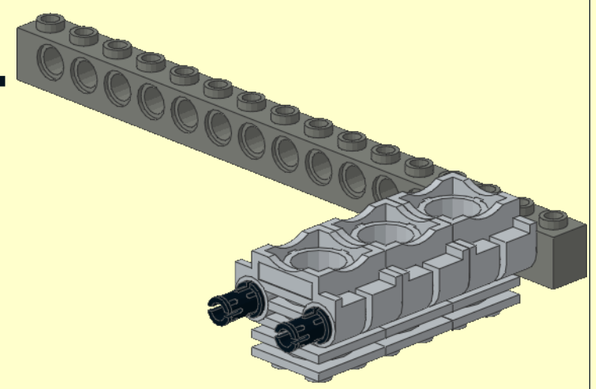

5

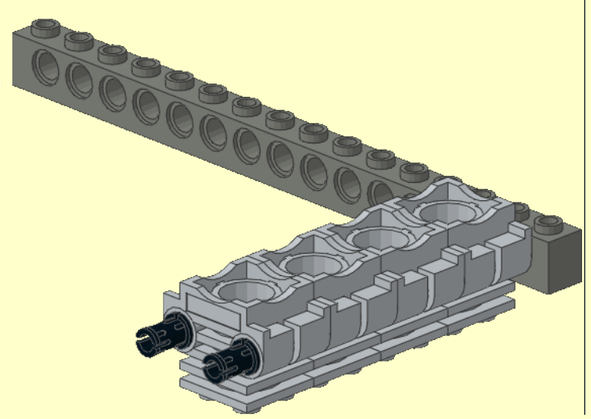

6

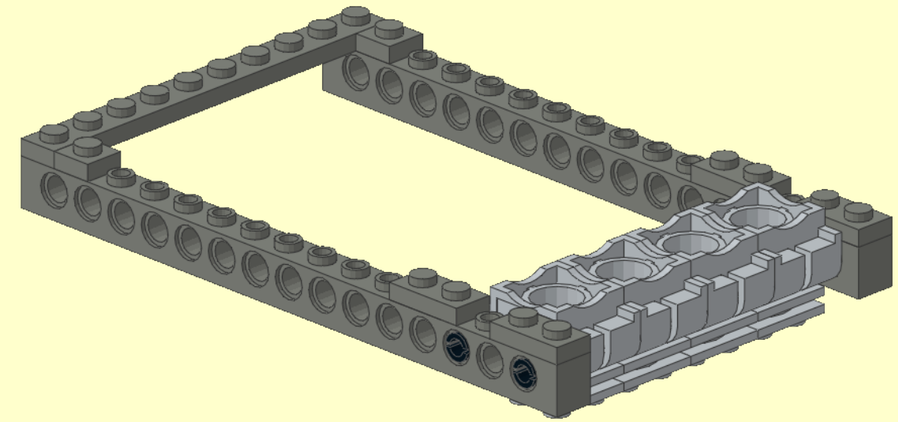

7

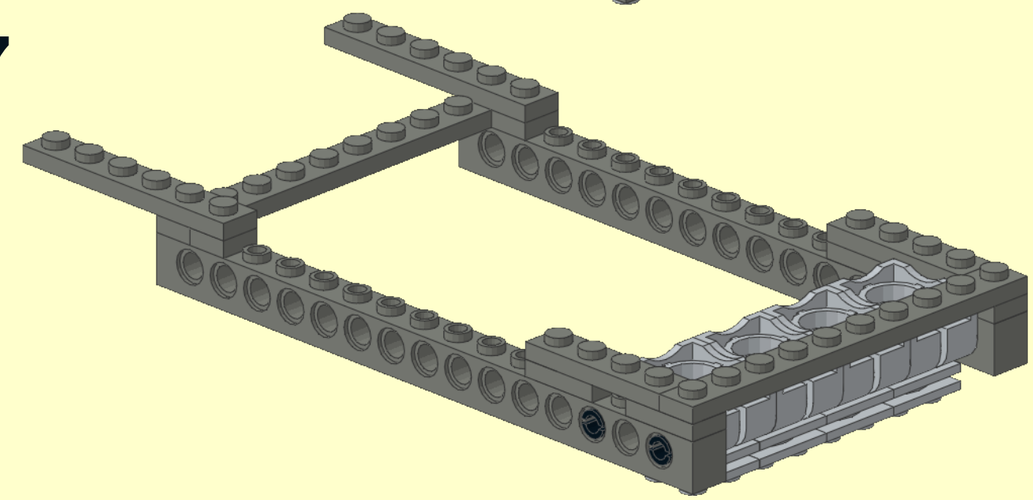

8

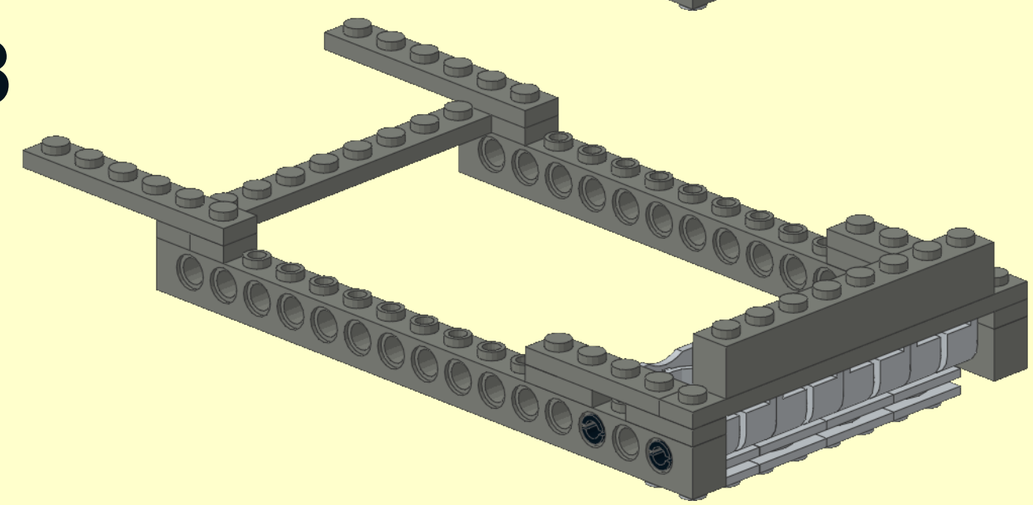

Copyright © 2016 by Maico Arts

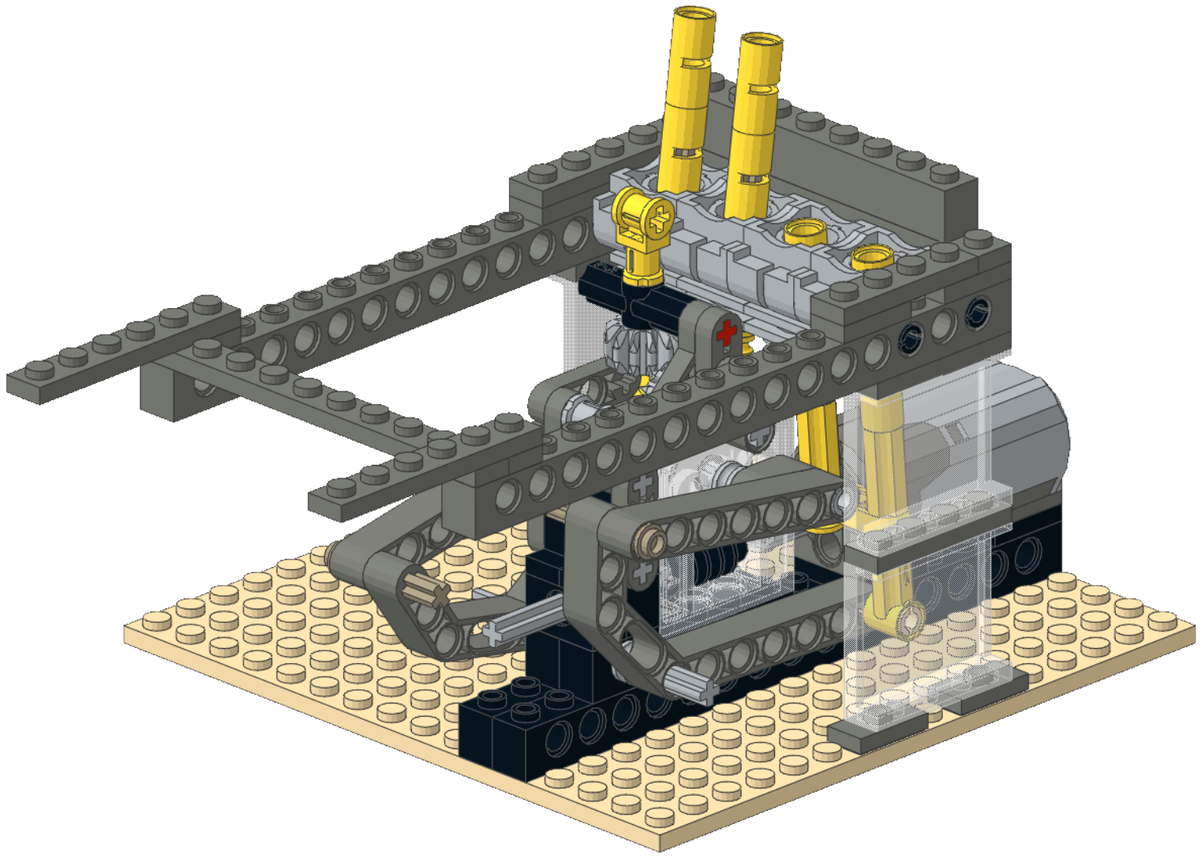

Copyright © 2016 by Maico Arts

13

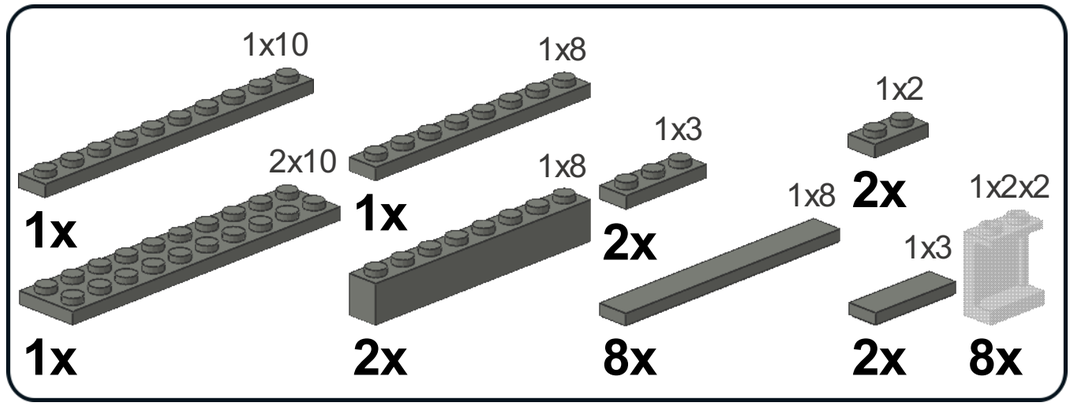

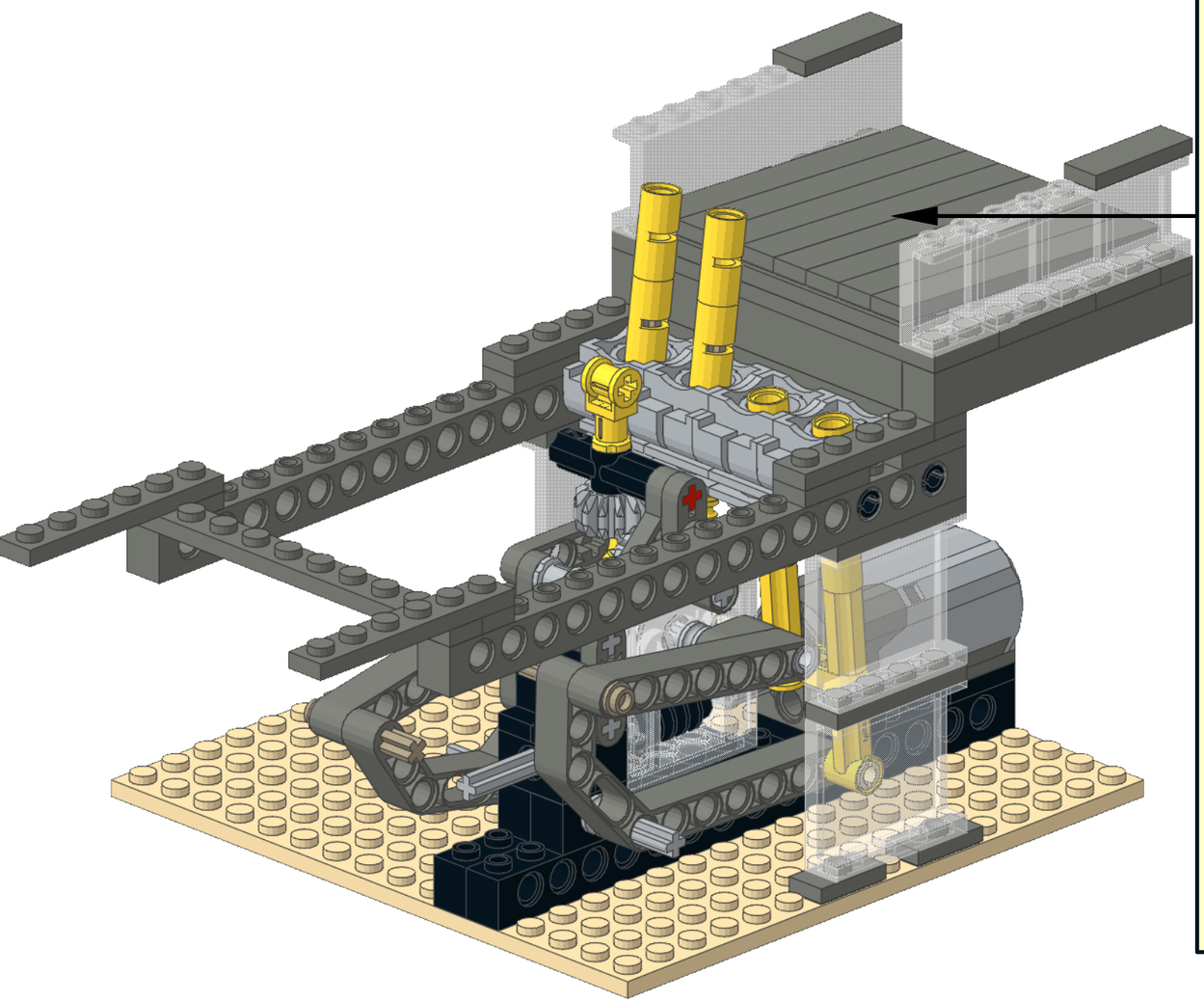

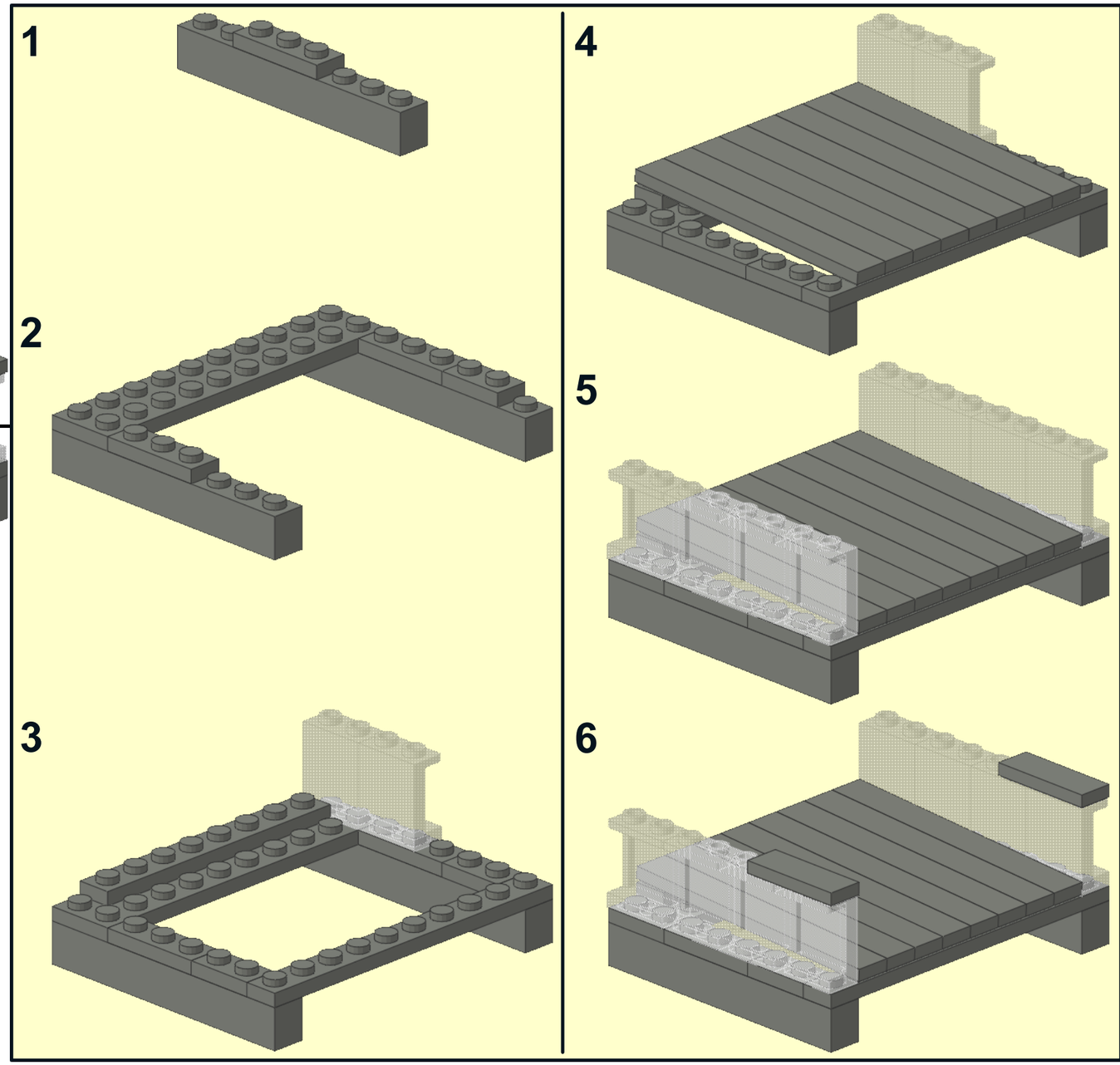

Copyright © 2016 by Maico Arts

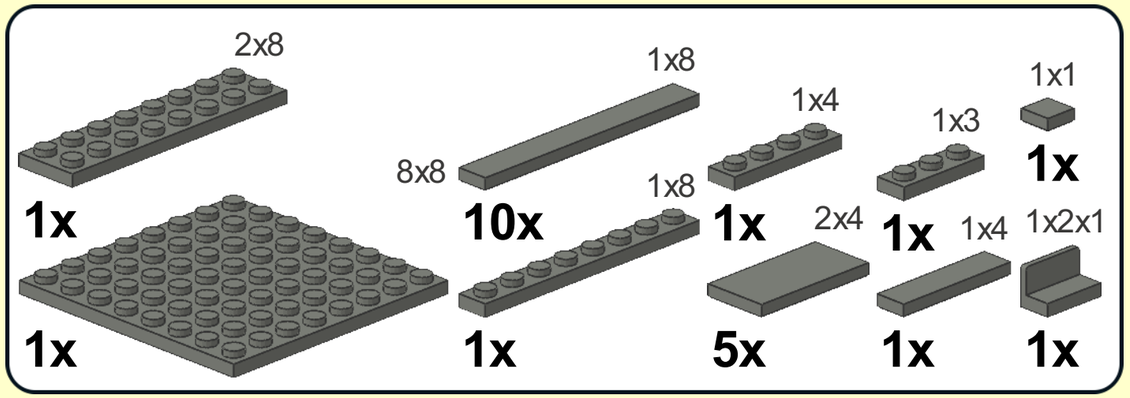

1

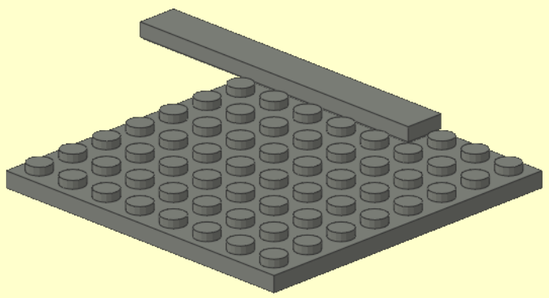

2

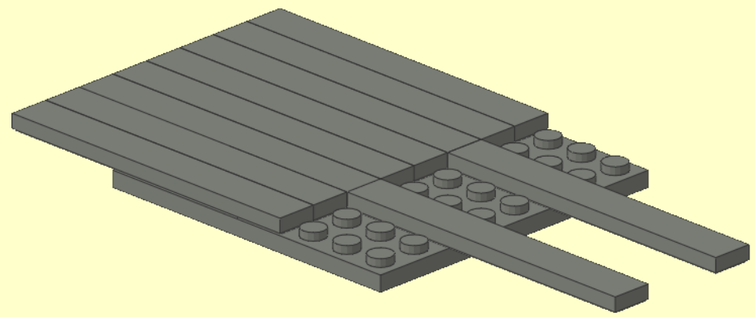

3

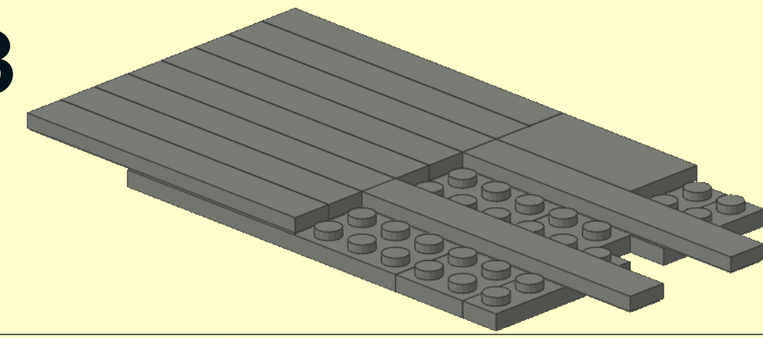

4

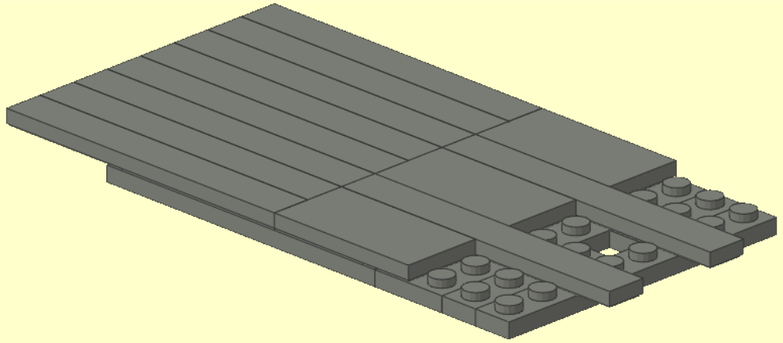

5

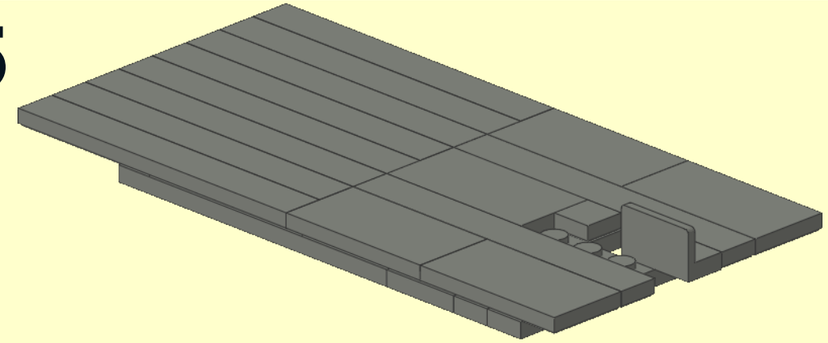

6

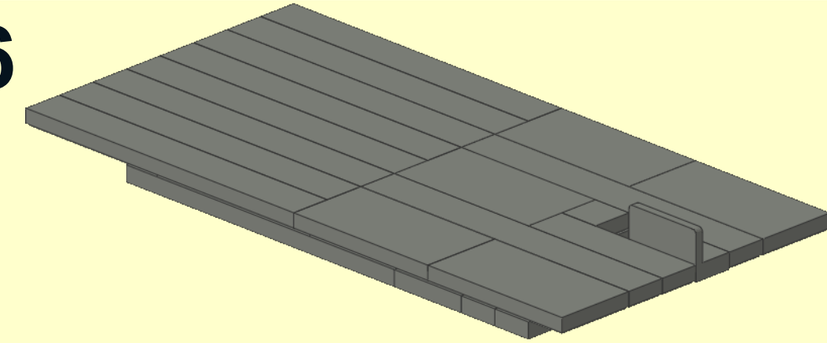

Copyright © 2016 by Maico Arts

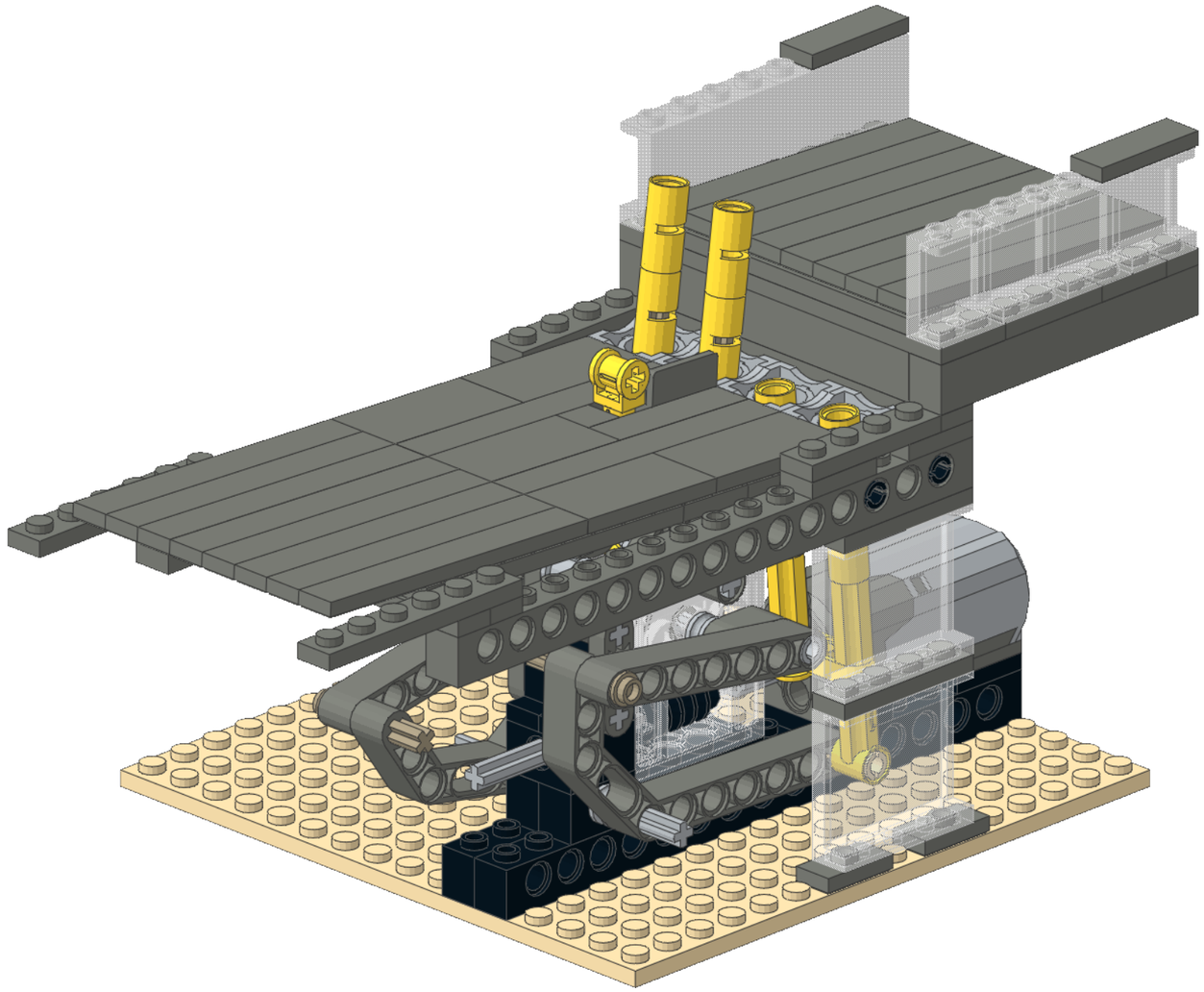

Copyright © 2016 by Maico Arts

15

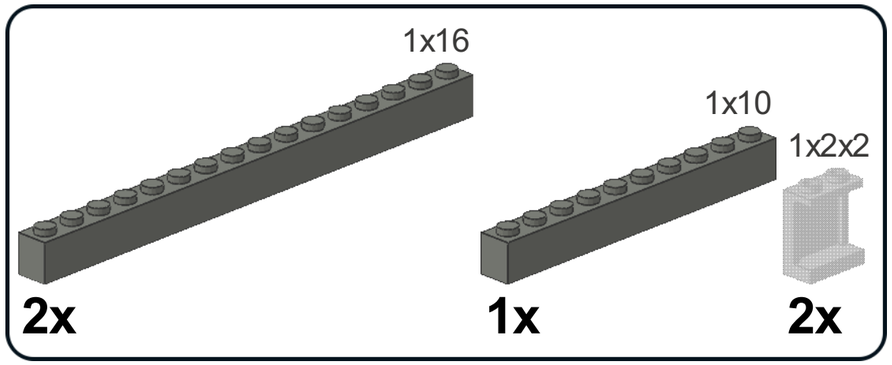

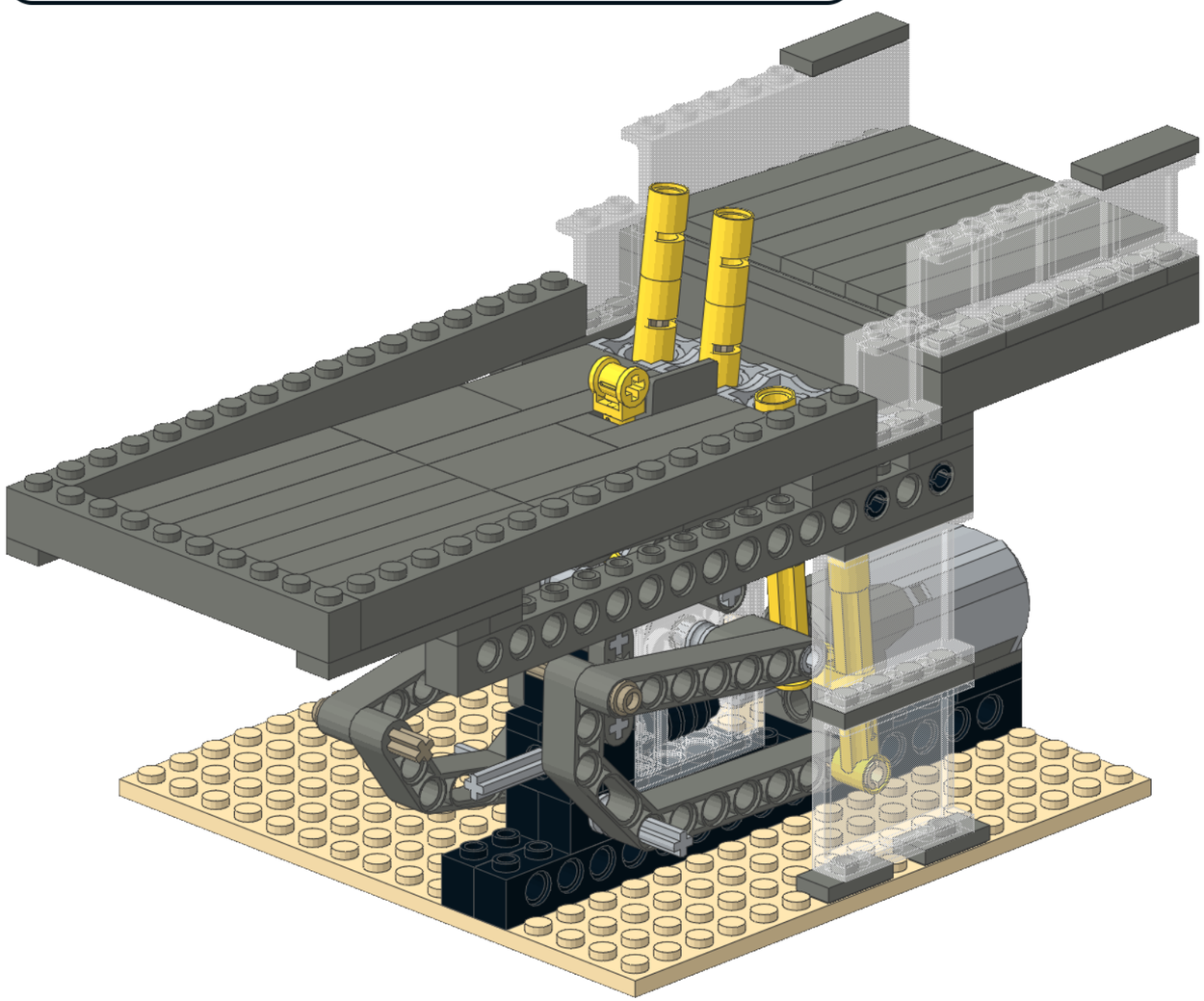

16

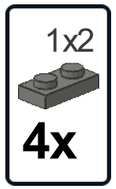

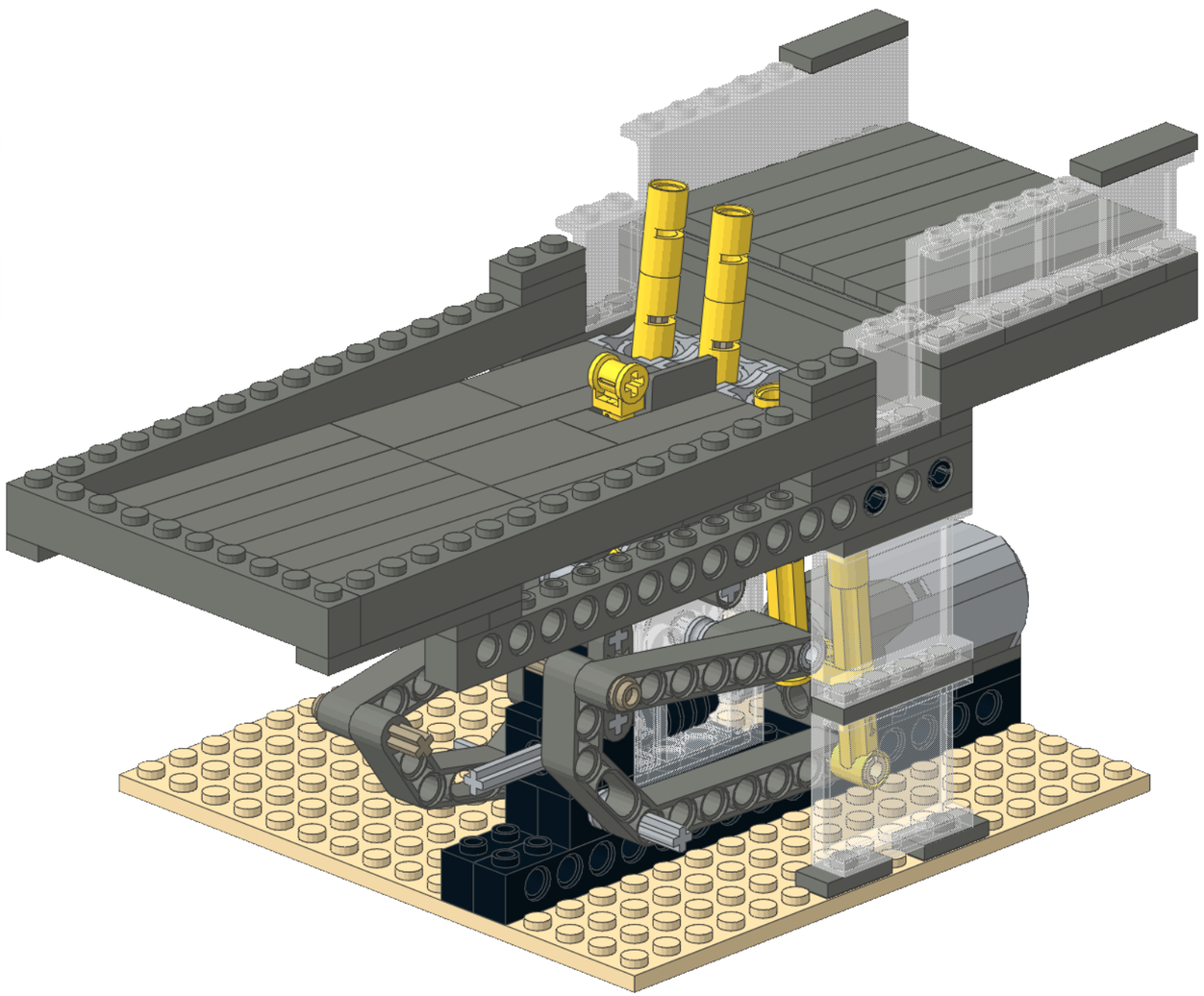

Copyright © 2016 by Maico Arts

17

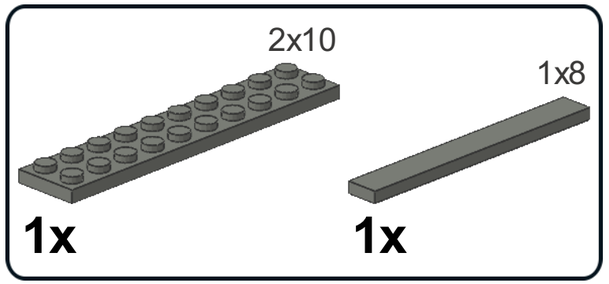

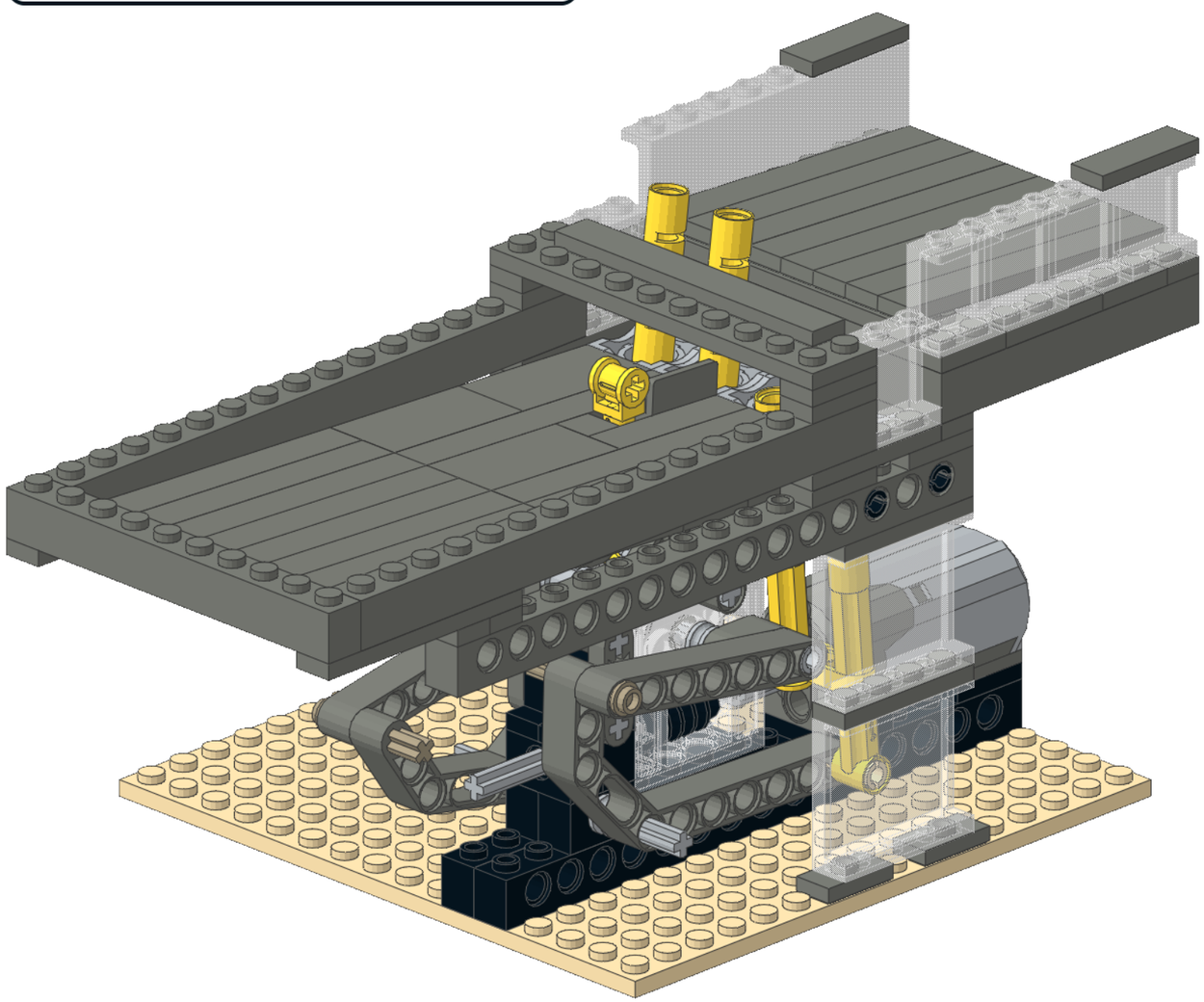

18

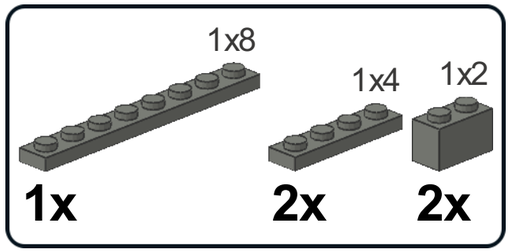

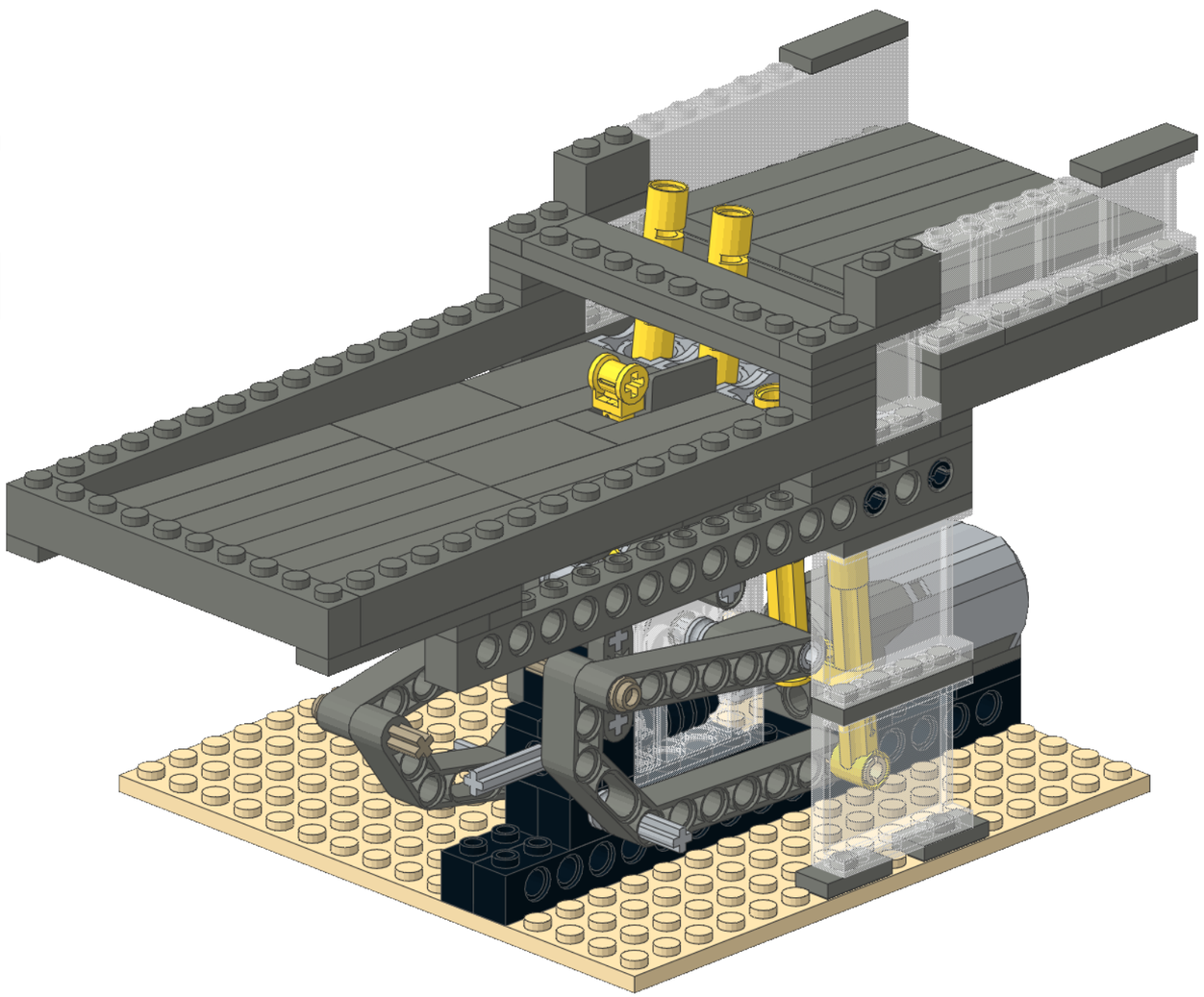

Copyright © 2016 by Maico Arts

19

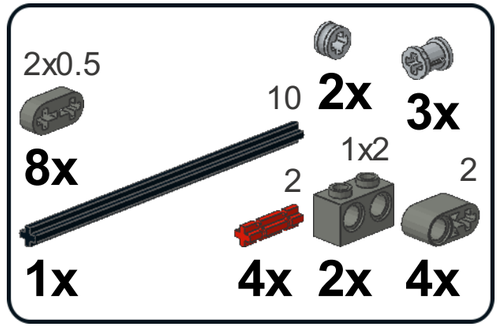

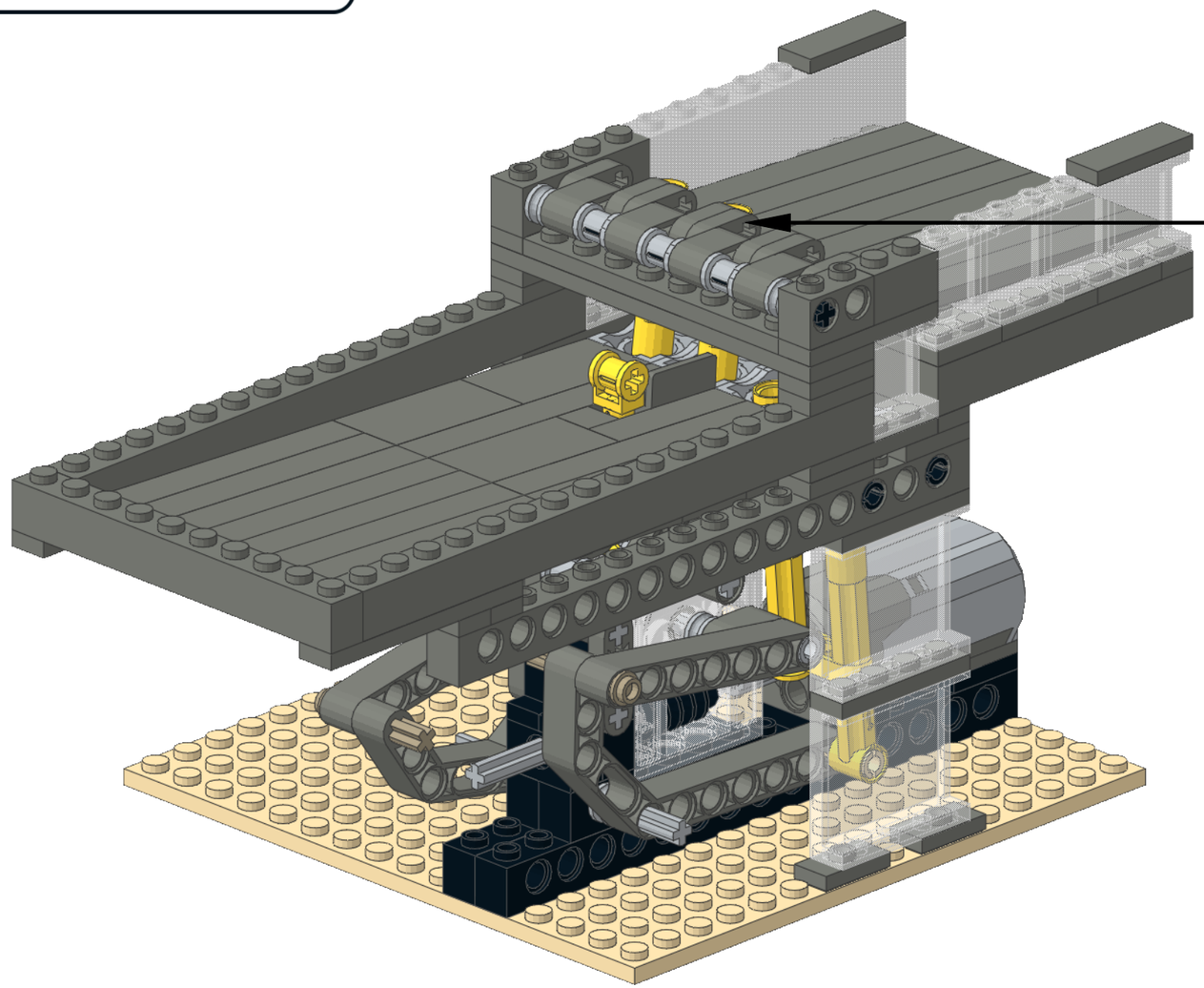

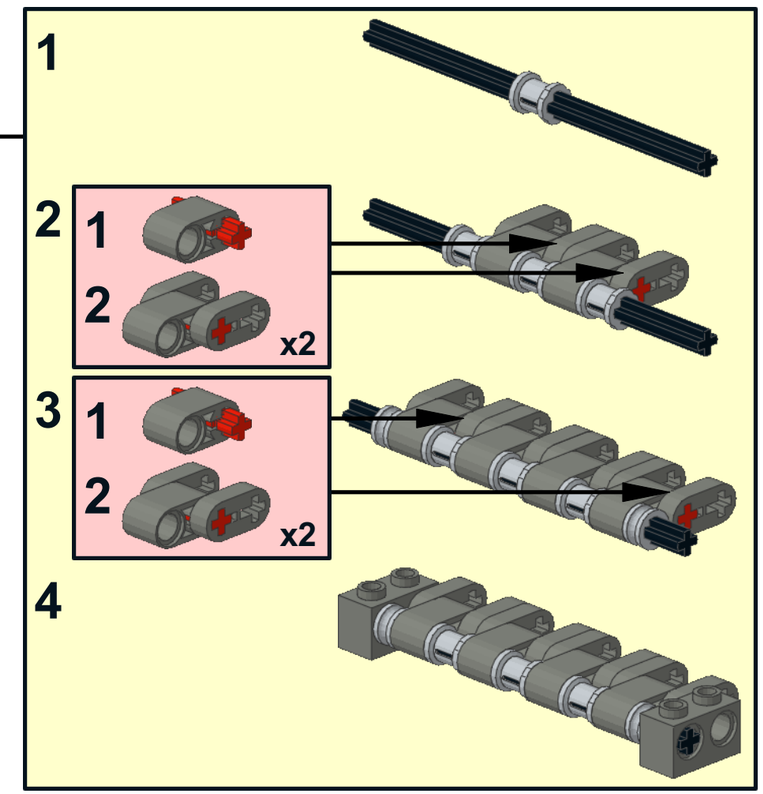

Copyright © 2016 by Maico Arts

20

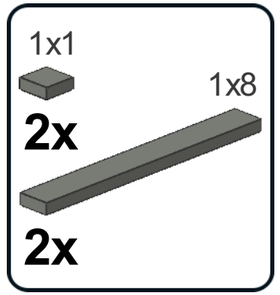

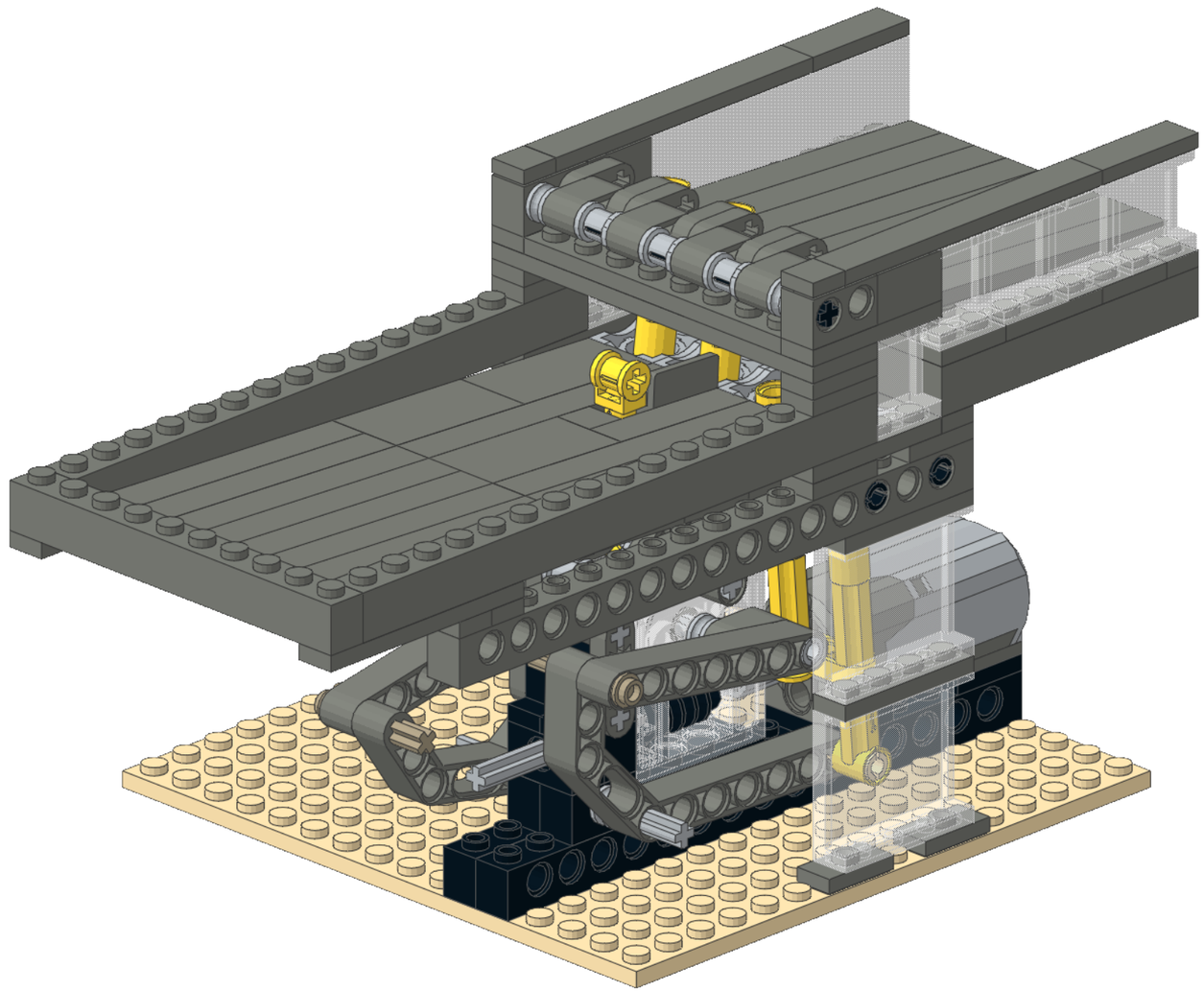

grijze-pin-lifter

Model instructions by Maico Arts

Copyright © 2016

http://www.greatballcontraption.nl

lego@t-hok.nl

LEGO® is a registered trademark of the LEGO Group, which does not sponsor, endorse, or authorize these instructions or the model they depict.

Instructions configured and generated using LPub3D 1.3.5.615.2
Download LPub3D at http://sourceforge.net/projects/lpub3d/